SLD35

MODULAR
LIGHTING
INSTRUMENTS
— by MLI NA Corporation

SLD35

Narrow light line

About SLD35

Straight **L**ine **D**edicated (for LED)

35mm width

Entirely custom-made, full modularity

Market segments

- Residential
- Hospitality
- Retail

Design

Mounting options

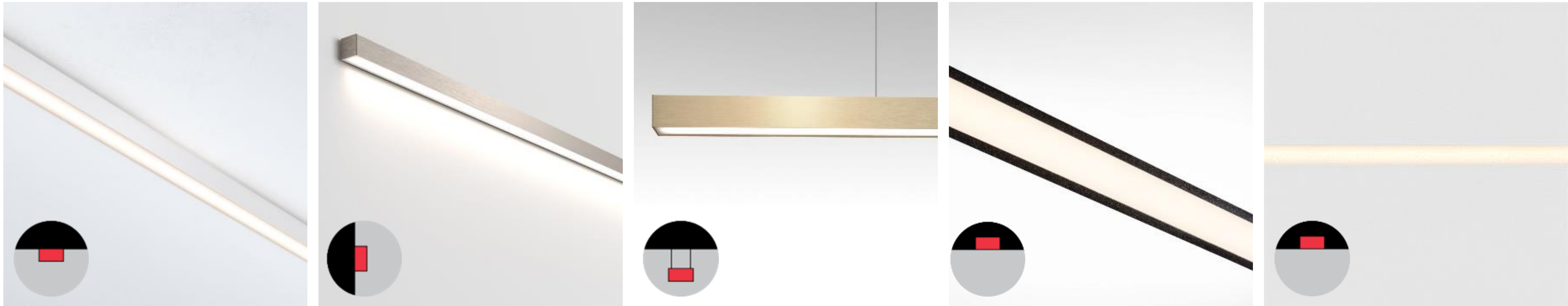

Colors

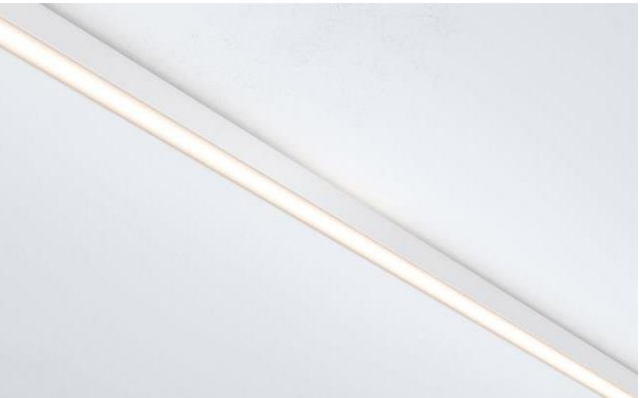

White Structure

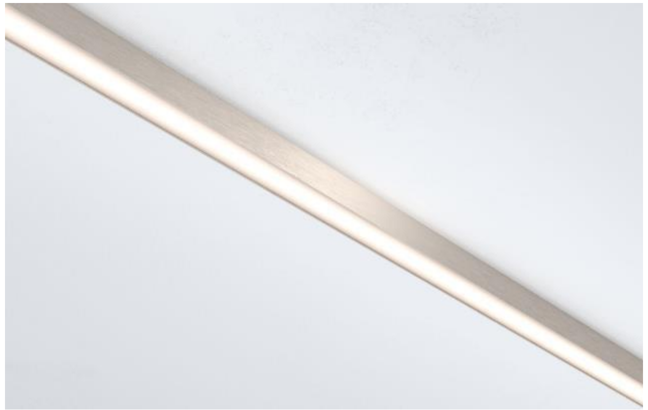

Brushed Anodised Silver Bronze

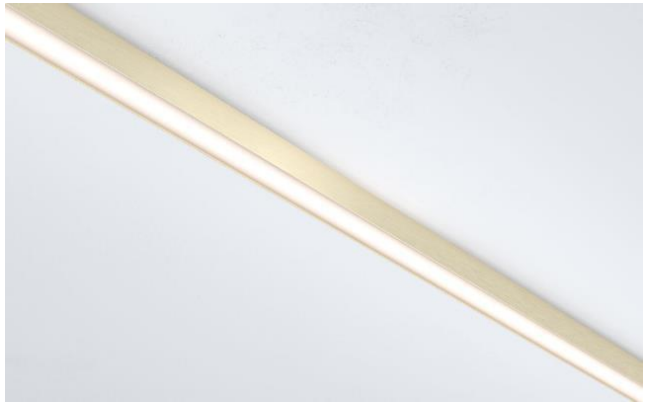

Brushed Anodised Champagne

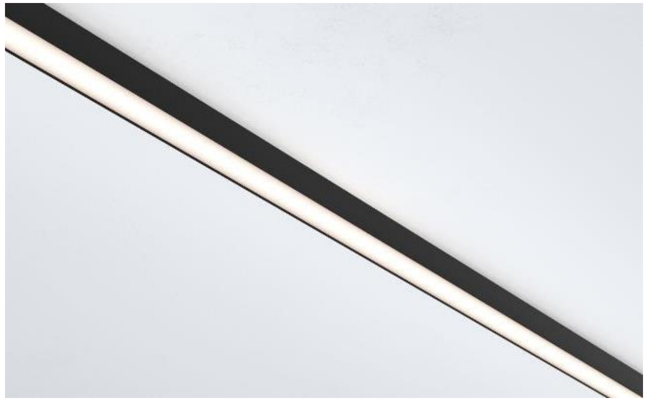

Black Structure

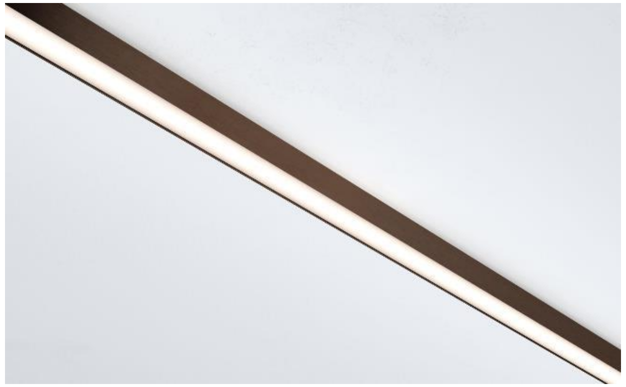

Brushed Anodised Bronze

LEDstrips and drivers

- LEDstrips 24V
    - 2700K – 3000K – 3500K
    - 1000 lm/m or 2000 lm/m
    - 14.4 W/m
    - CRI90
    - 3m or 5m

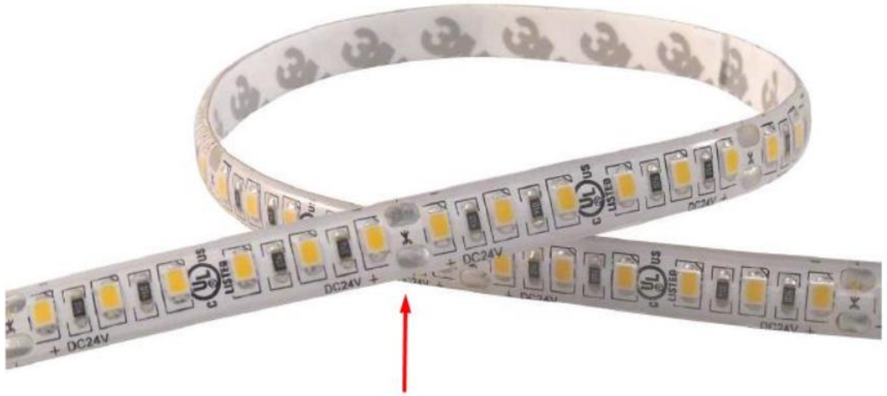
DC24V
LISTED

✂
can be cut every 1.97 inches (50mm)

- Drivers 24V
    - 60W or 96W
    - 0-10V/Tre dim 1%

UNIDRIVER
L.T.F. DIMMABLE LED DRIVER

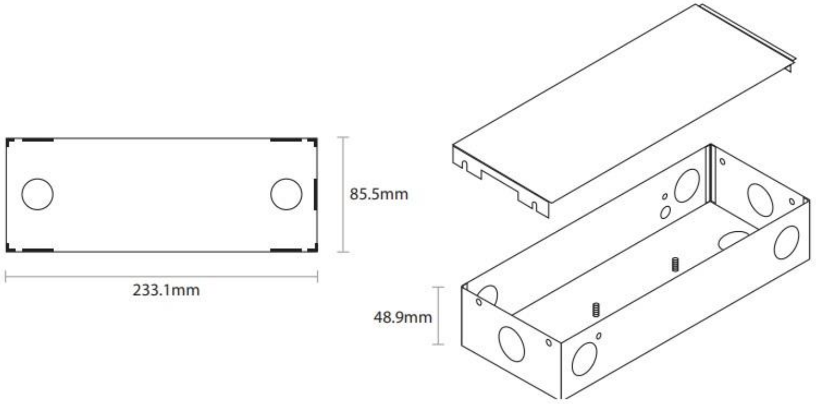
85.5mm
233.1mm
48.9mm

DESIGN

COLORS THAT MATCH EVERY INTERIOR

DIECAST ENDPLATES

THIN AND SLIM DESIGN

APPLICATION

RESIDENTIAL
HOSPITALITY
RETAIL

SURFACE & WALL MOUNTING

180° AND 90° CONNECTIONS

EASY INSTALLATION

TECHNOLOGY

CONSISTENT COLOR TEMPERATURES

POLY IN PMMA

ACCURATE COLOR RENDERING

REMOTE DRIVER

LED strip options:

US_93000032 (2700K) (1000lm/m) (3m)
US_93000033 (3000K) (1000lm/m) (3m)
US_93000034 (3500K) (1000lm/m) (3m)
US_93000016 (2700K) (1000lm/m) (5m)
US_93000017 (3000K) (1000lm/m) (5m)
US_93000018 (3500K) (1000lm/m) (5m)
US_93000035 (2700K) (2000lm/m) (3m)
US_93000036 (3000K) (2000lm/m) (3m)
US_93000037 (3500K) (2000lm/m) (3m)
US_93000026 (2700K) (2000lm/m) (5m)
US_93000027 (3000K) (2000lm/m) (5m)
US_93000028 (3500K) (2000lm/m) (5m)

For conversion, meters to feet:

1m = 3.28ft

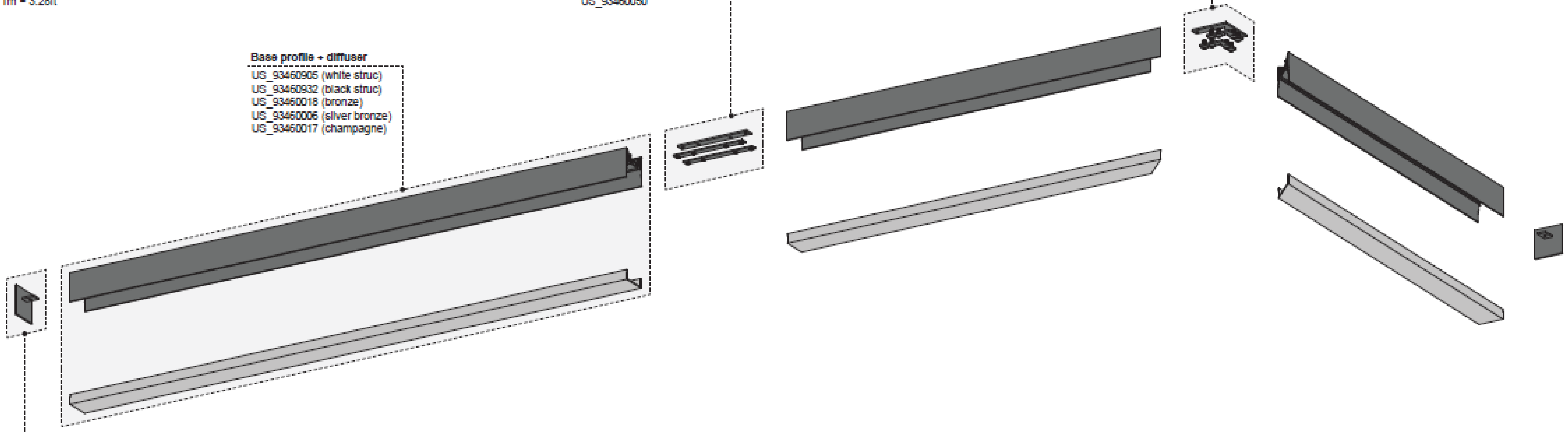

Connection 90°

US_93460060

Connection 180°

US_93460050

Base profile + diffuser

US_93460905 (white struc)
US_93460932 (black struc)
US_93460018 (bronze)
US_93460006 (silver bronze)
US_93460017 (champagne)

Endplate

US_93469181 (white struc)
US_93468181 (black struc)
US_93468118 (bronze)
US_93468106 (silver bronze)
US_93468117 (champagne)

* for wall installation, additional **Wall brackets** are needed:

US_93469161 (white struc)
US_93468161 (black struc)
US_93460161 (anodized)

Click the diffuser out of the base profile.

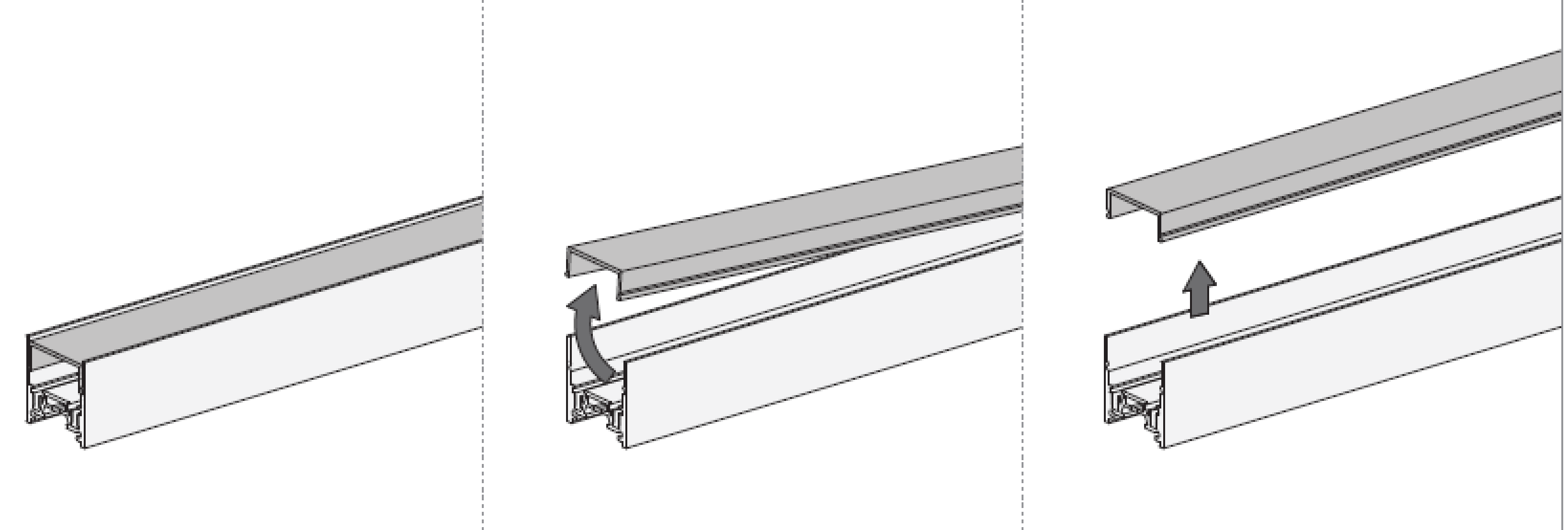

Prepare the base profile, drill the necessary holes (remove burrs after drilling).

POWER SUPPLY PAIR (2 holes)
MAXIMUM Ø 3/16" (5mm)

These holes are for the wires, from the power supply, to the LED strip.
See page 5 and 11 for details.

MOUNTING PAIR (2 holes)
MAXIMUM Ø 3/16" (5mm)

These screw clearance holes are needed to mount the profile directly to the ceiling (not needed in combination with wall brackets). Necessary amount of pairs depends on the profile length.
See page 2 for details.

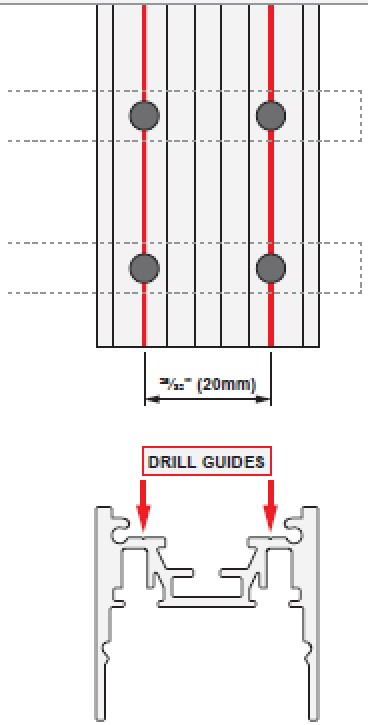

CEILING INSTALLATION INSTRUCTIONS *page 2 - 6*

WALL INSTALLATION INSTRUCTIONS *page 7 - 12*

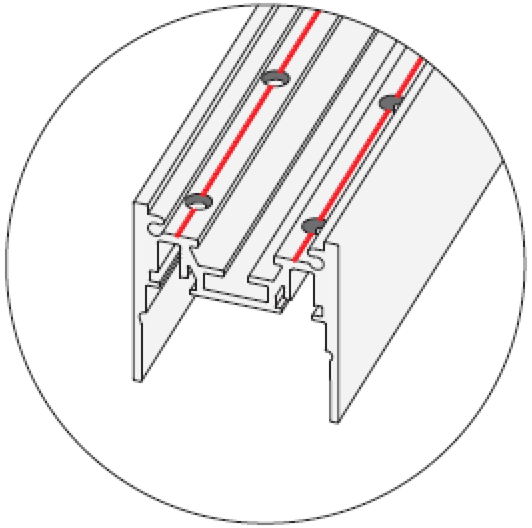

Slide the endplates in the base profile and tighten.

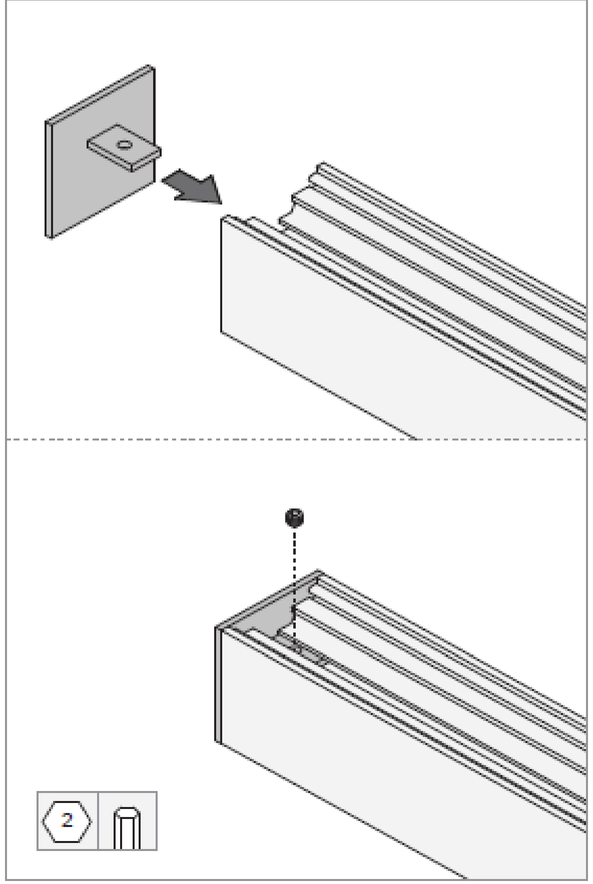

Mount the base profile to the ceiling.

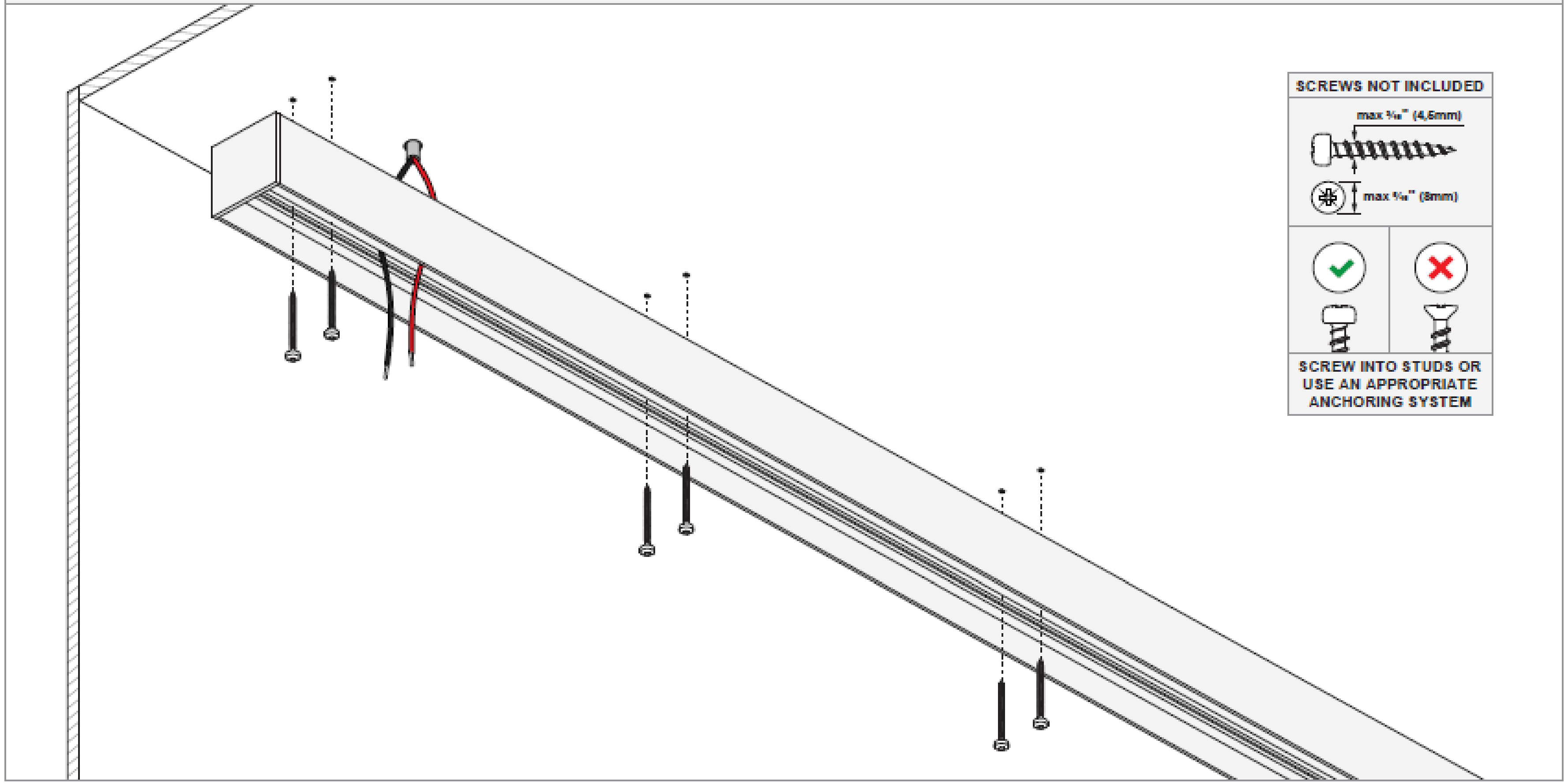
SCREWS NOT INCLUDED
max 3/16" (4,5mm)
max 5/16" (8mm)
SCREW INTO STUDS OR USE AN APPROPRIATE ANCHORING SYSTEM

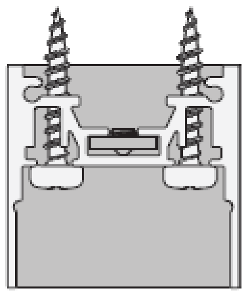

Fasteners, amount.

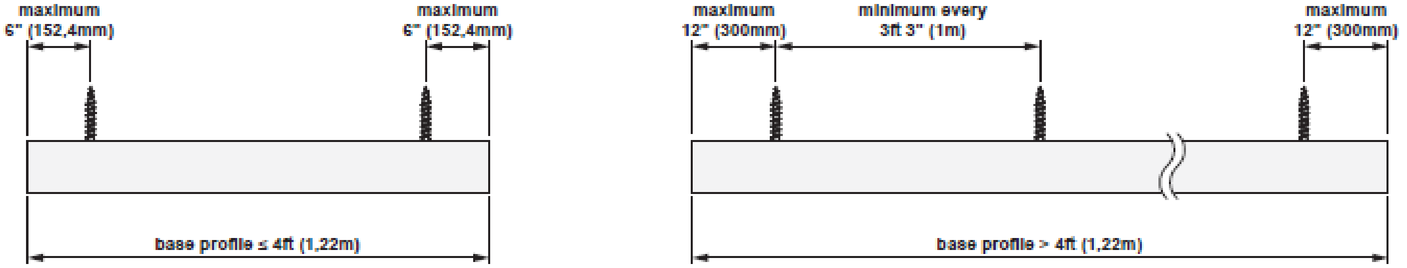
maximum
6" (152,4mm)
maximum
6" (152,4mm)
base profile ≤ 4ft (1,22m)
maximum
12" (300mm)
minimum every
3ft 3" (1m)
maximum
12" (300mm)
base profile > 4ft (1,22m)

Slide the narrow connection brackets in the first base profile.

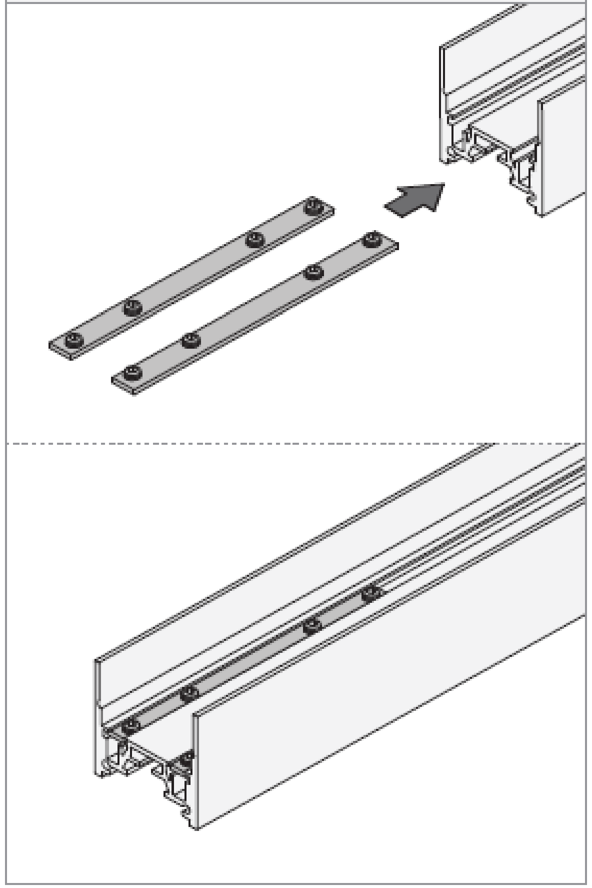

Mount the first base profile to the ceiling. Align the second base profile with the first and mount the same way.

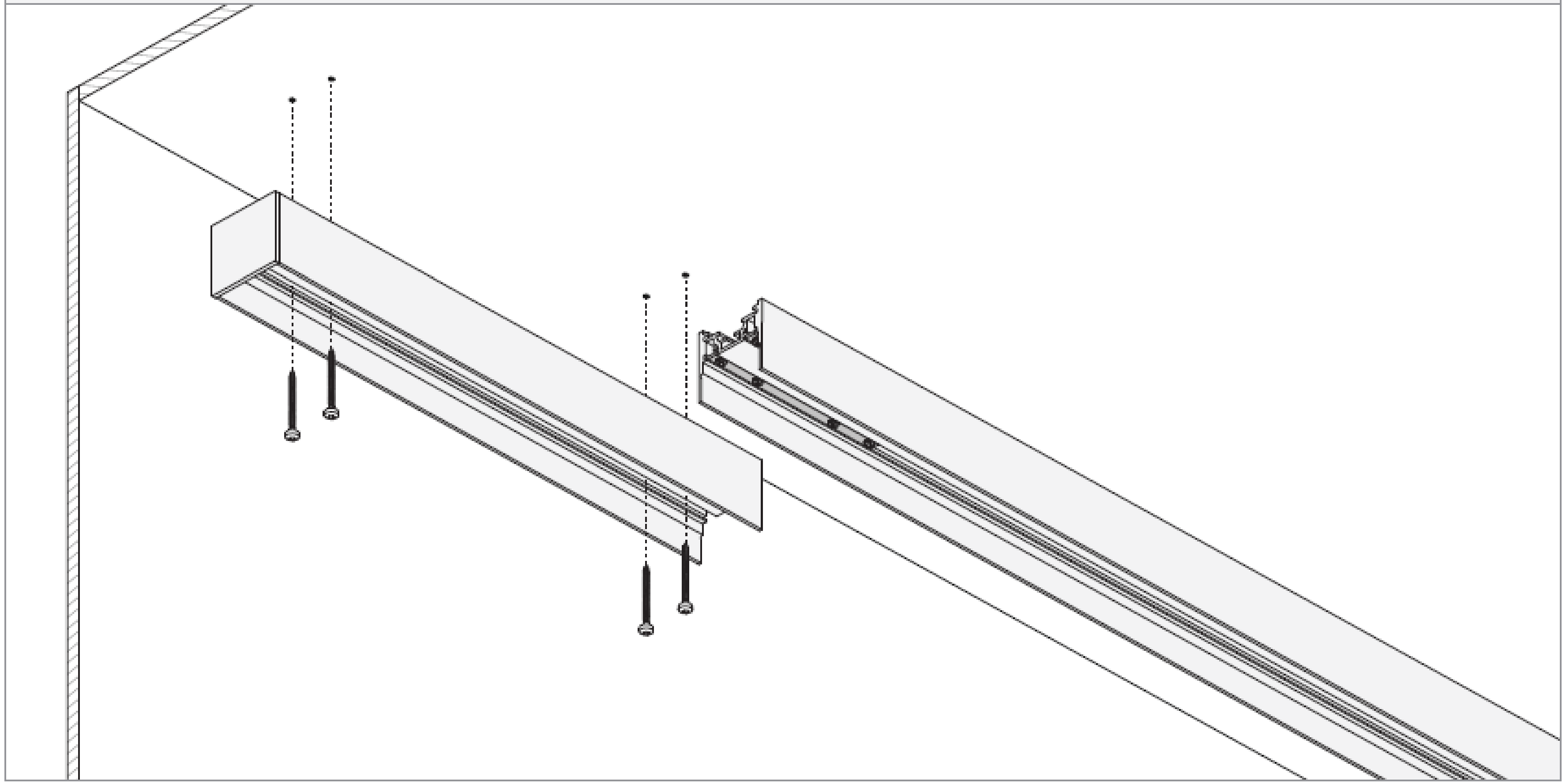

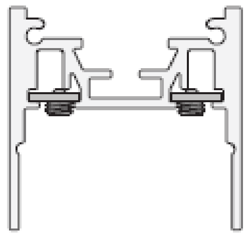

NOT NECESSARY TO USE THE THIRD BRACKET FOR CEILING APPLICATIONS

Slide the connection brackets over both profiles and tighten.

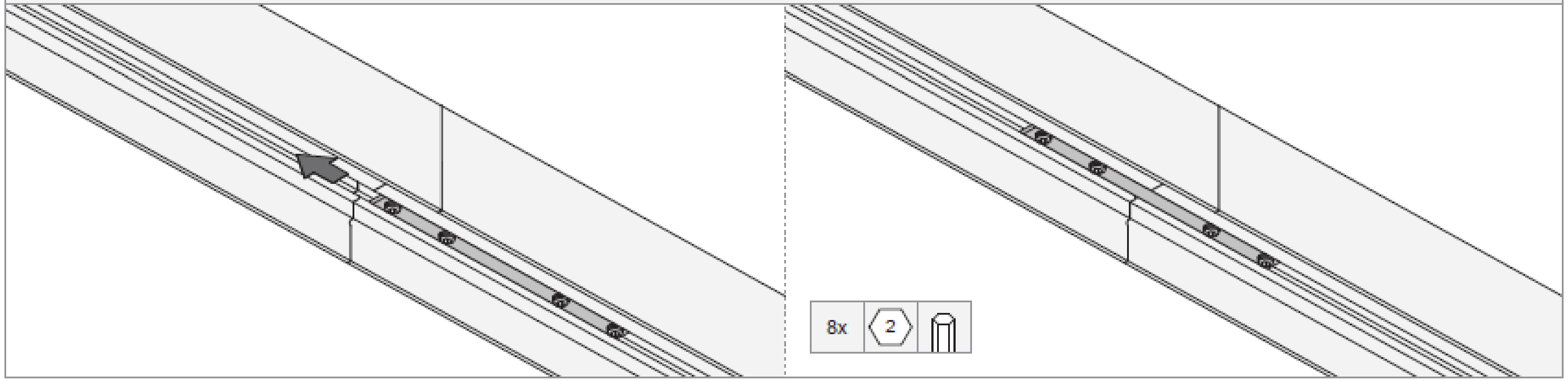

Mount the first base profile to the ceiling. Align the second base profile with the first and mount the same way.

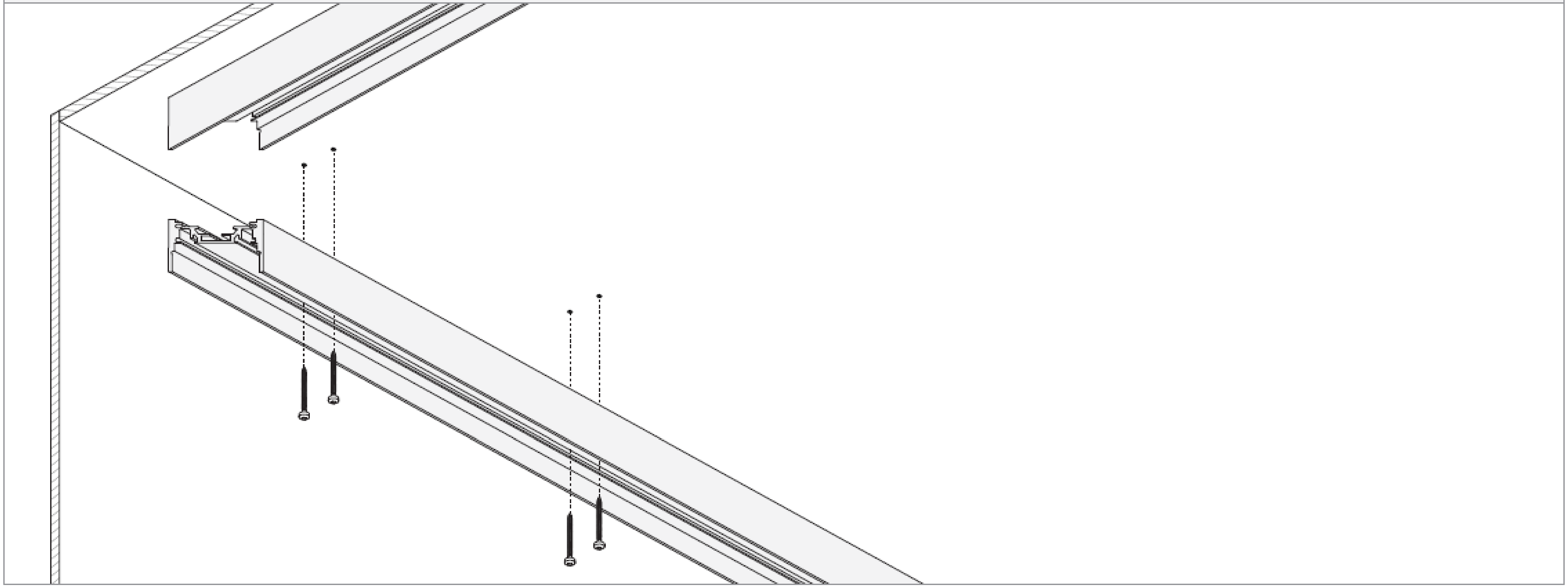

Place the narrow connection brackets over both profiles and tighten.

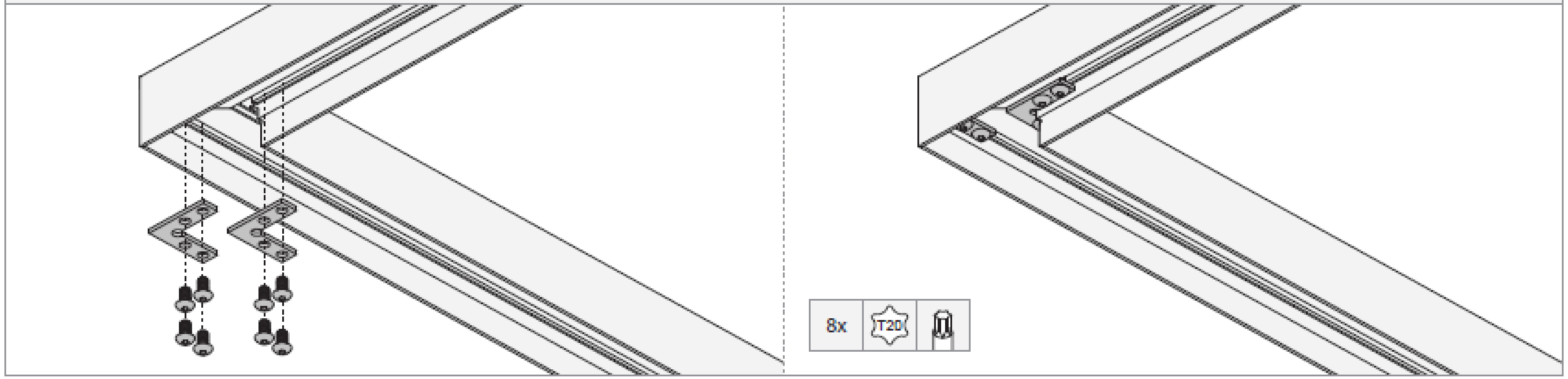

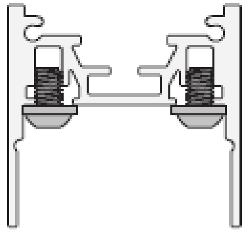

NOT NECESSARY TO USE THE THIRD
BRACKET FOR CEILING APPLICATIONS

Mount the LED strip only to the designated area on the base profile.

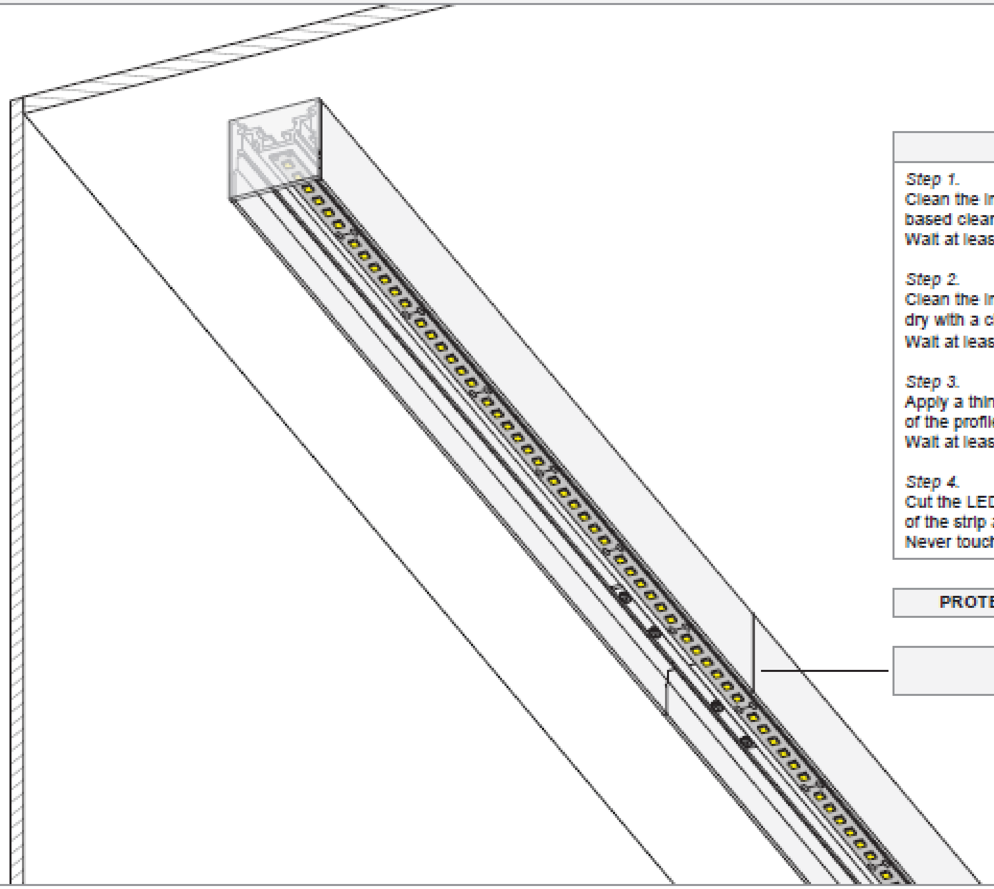

HOW TO MOUNT THE LED STRIP IN THE PROFILE

Step 1.
Clean the inside of the profile with WD-40 Industrial Cleaner or Scotch 1626 (solvent based cleaner) or equivalent and wipe dry with a clean towel.
Wait at least 10 minutes before the next step.

Step 2.
Clean the inside of the profile with XYZ (organic cleaner) or equivalent and wipe dry with a clean towel.
Wait at least 2 minutes before the next step.

Step 3.
Apply a thin, uniform coat of 3M Primer 94 (tape primer) or equivalent on the surface of the profile where the LED strip will be placed.
Wait at least 5 minutes before the next step.

Step 4.
Cut the LED strip to the correct length. Peel a part of the adhesive backing at one end of the strip and place the strip on the mounting area, work from one end to the other.
Never touch the LEDs, only push on the sides of the strip.

PROTECT THE WIRES WITH A CABLE SLEEVE TO AVOID ANY DAMAGE

NO NEED TO SPLIT THE LEDSTRIP INTO 2 PARTS IF THE 180° CONNECTION IS USED AND PROPERLY INSTALLED

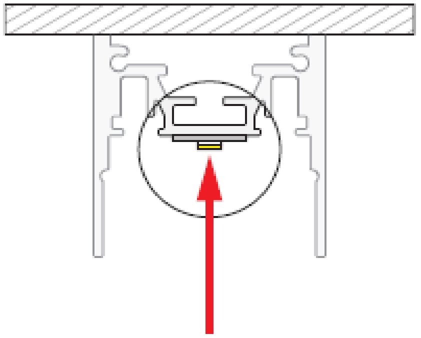

POSITION IN THE MIDDLE

Electrical connection.

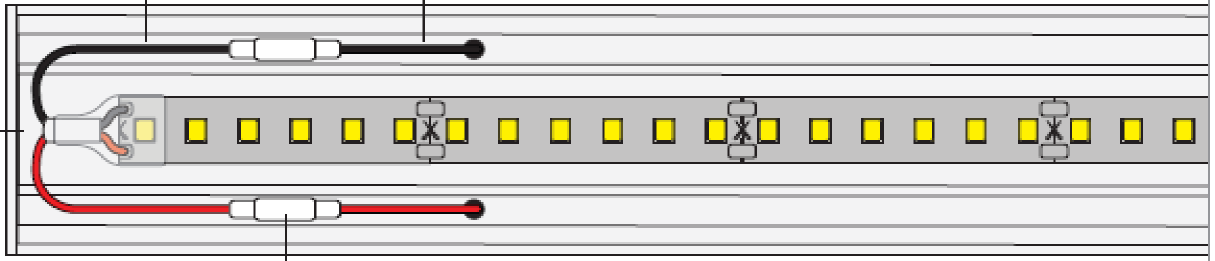
FROM LED STRIP
TO LED DRIVER
MOUNTING SURFACE MUST BE SMOOTH, CLEAN, DRY AND FREE FROM OIL, WAXES OR GREASE
CONNECTORS NOT INCLUDED

⚠

SEE INDIVIDUAL LED STRIP INSTALLATION INSTRUCTION FOR ALL MECHANICAL FEATURES (CUTTING, MOUNTING ...)

⚠

SEE INDIVIDUAL LED STRIP INSTALLATION INSTRUCTION FOR ALL ELECTRICAL FEATURES (RATINGS, CONNECTIONS ...)

Finish the installation, click the diffuser(s) back in the base profile.

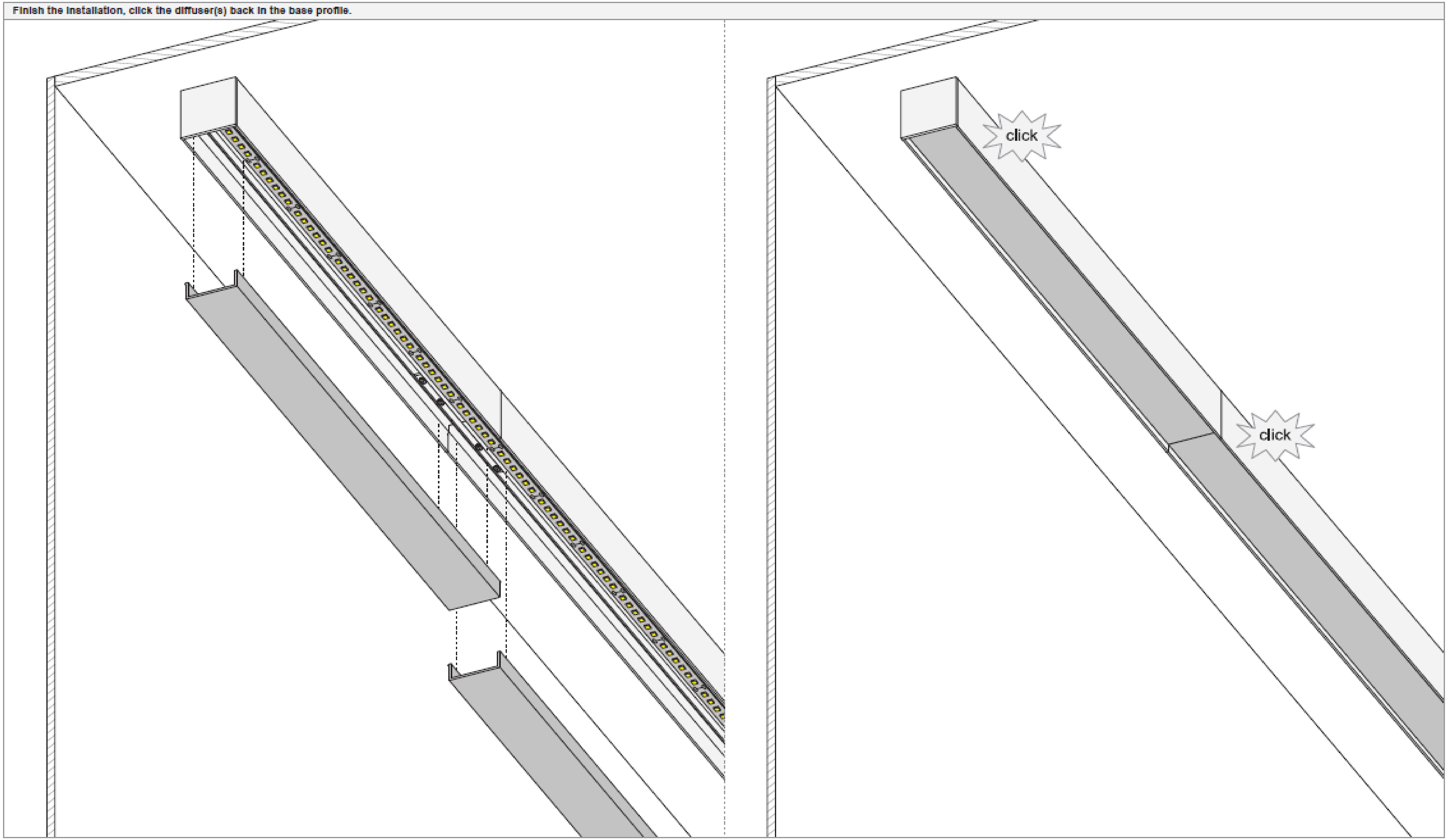
click
click

Mount the wall brackets.

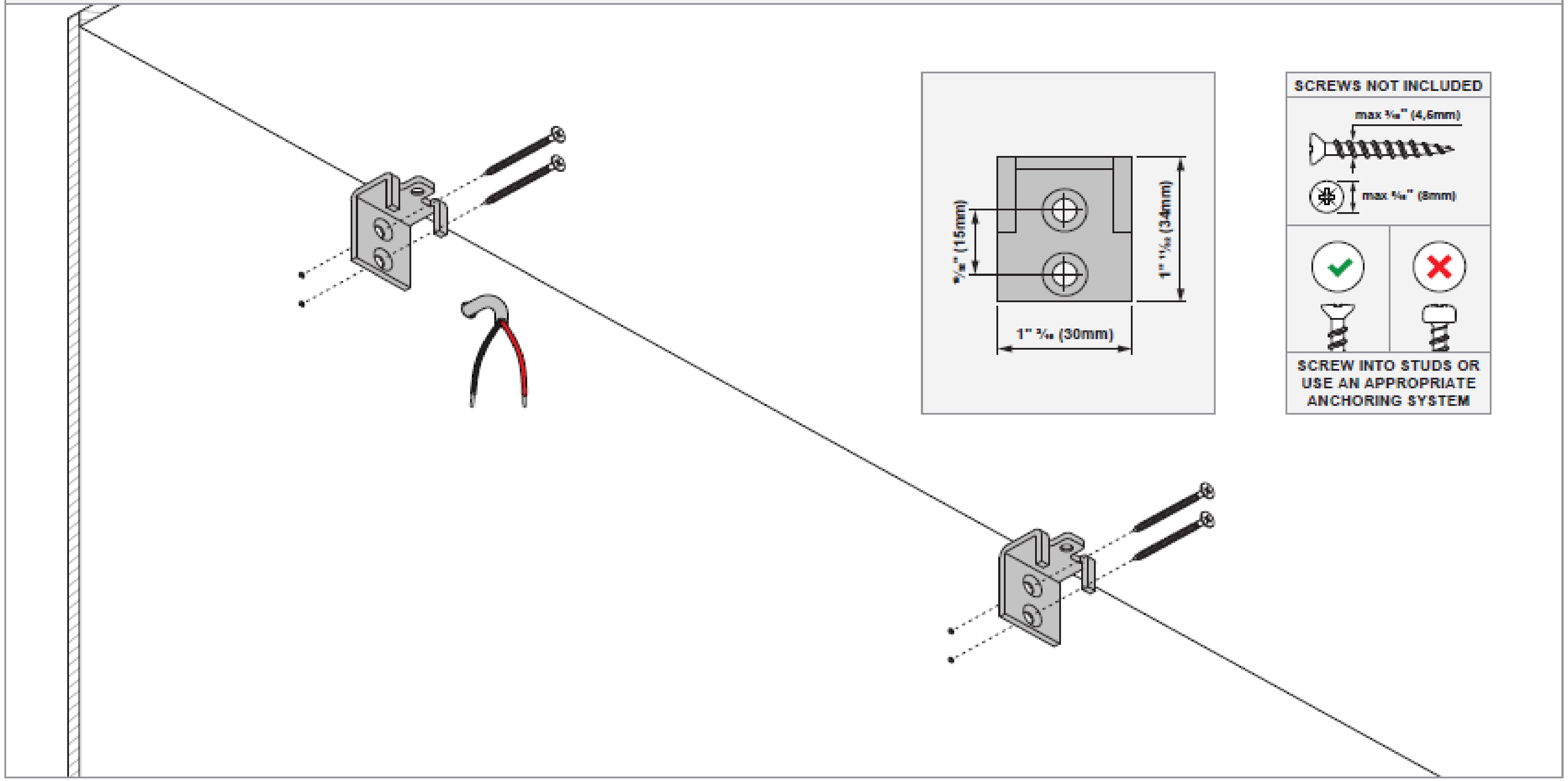
9/16" (15mm)
1" 11/32 (34mm)
1" 3/16 (30mm)
SCREWS NOT INCLUDED
max 3/16" (4,6mm)
max 5/16" (8mm)
SCREW INTO STUDS OR USE AN APPROPRIATE ANCHORING SYSTEM

Slide all wall fixation plates in the base profile and tighten.

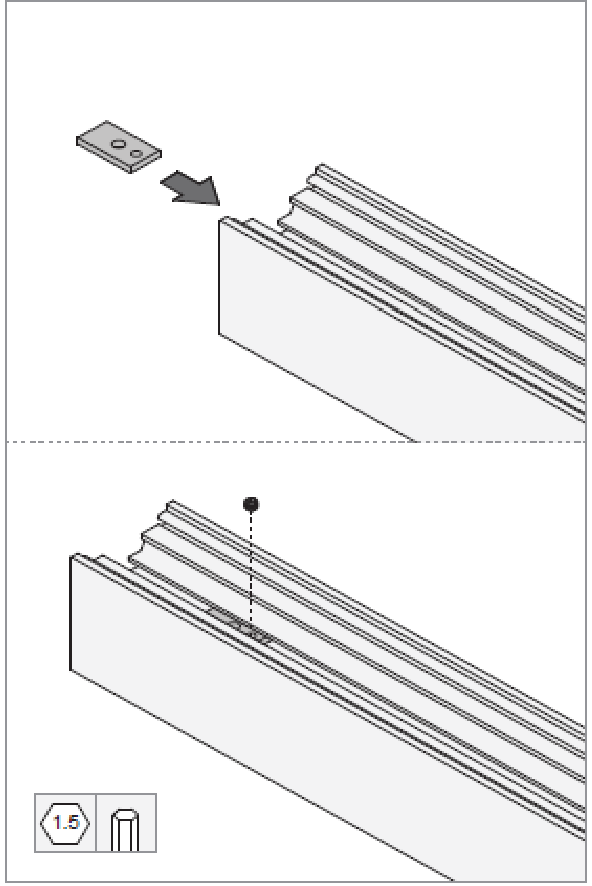

Wall brackets, amount.

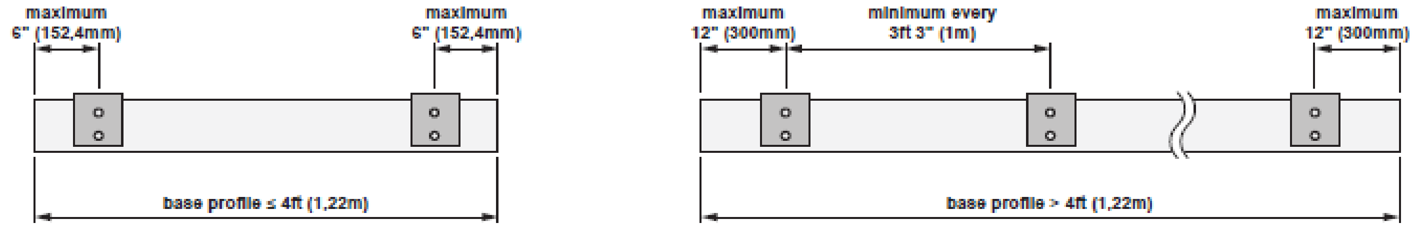
maximum 6" (152,4mm)
maximum 6" (152,4mm)
base profile ≤ 4ft (1,22m)
maximum 12" (300mm)
minimum every 3ft 3" (1m)
maximum 12" (300mm)
base profile > 4ft (1,22m)

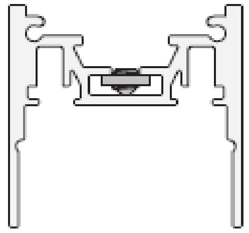

Attach the base profile to the wall brackets.

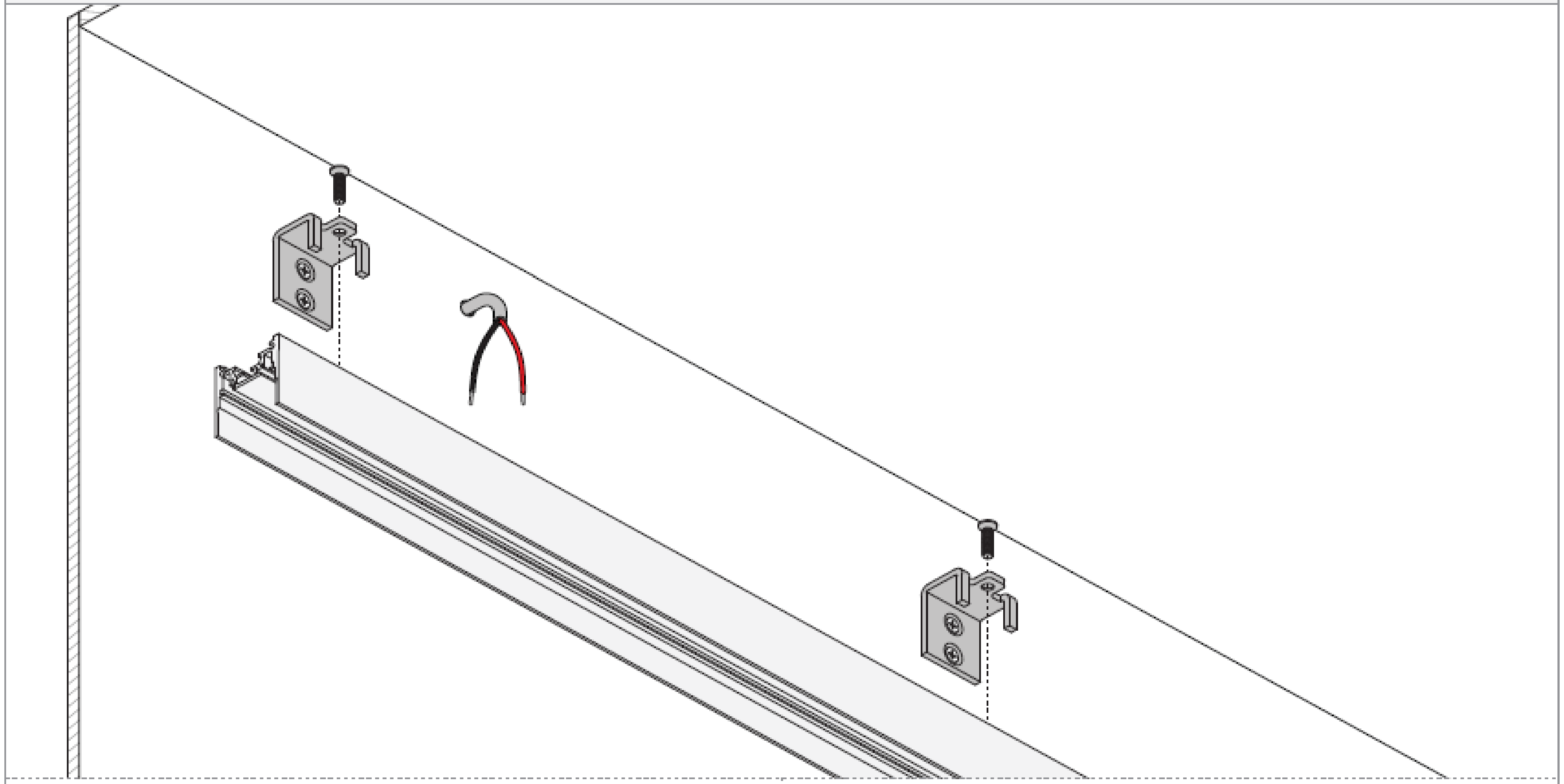

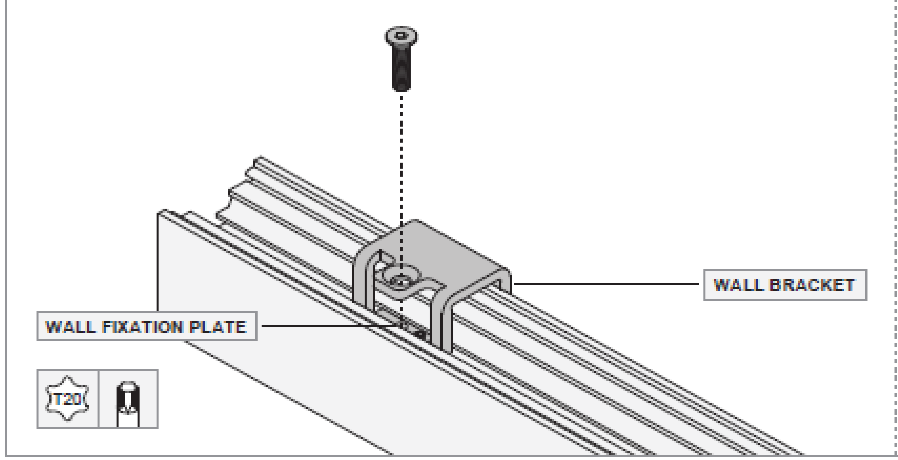
WALL BRACKET
WALL FIXATION PLATE
T20

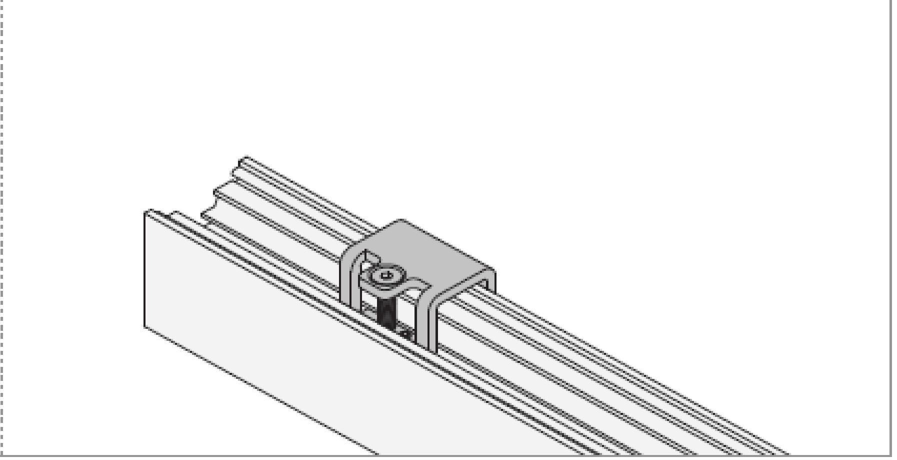

Slide the endplates in the base profile and tighten.

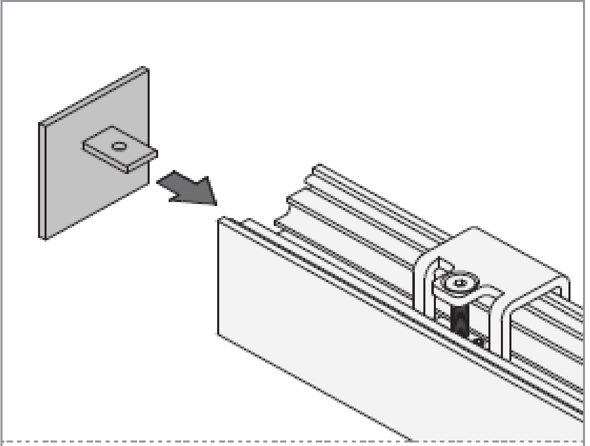

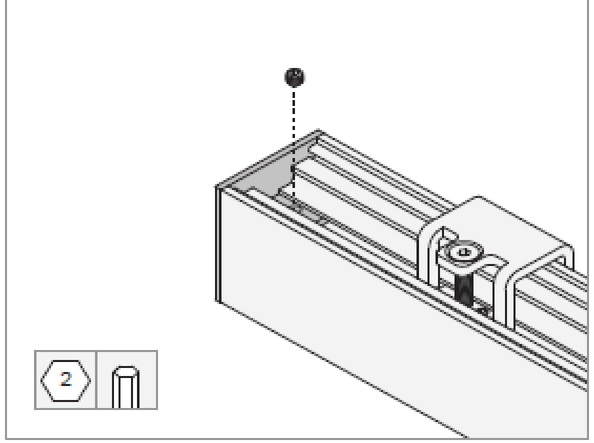

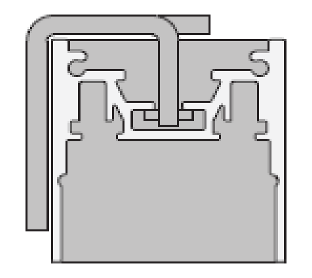

Slide all connection brackets in the first base profile.

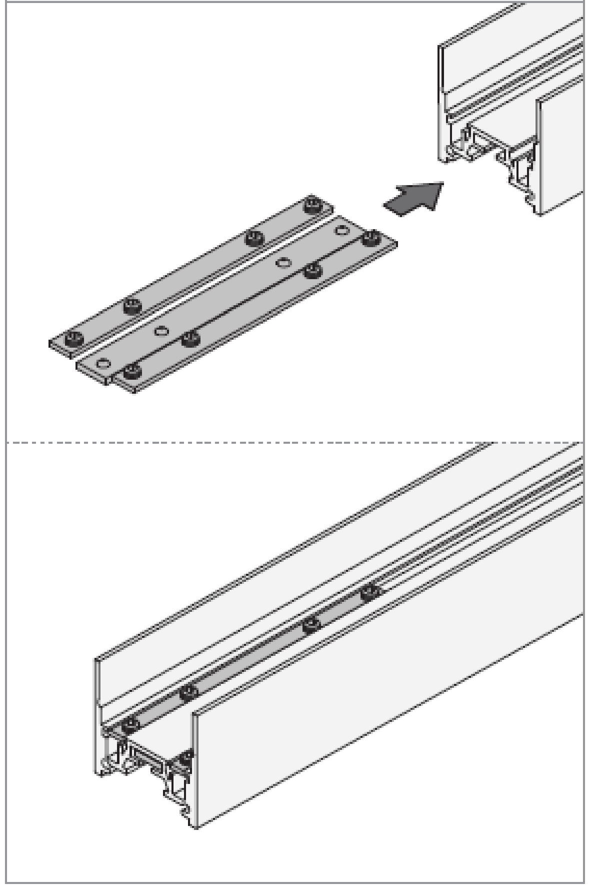

Attach the first base profile to the wall brackets. Align the second base profile with the first and attach the same way.

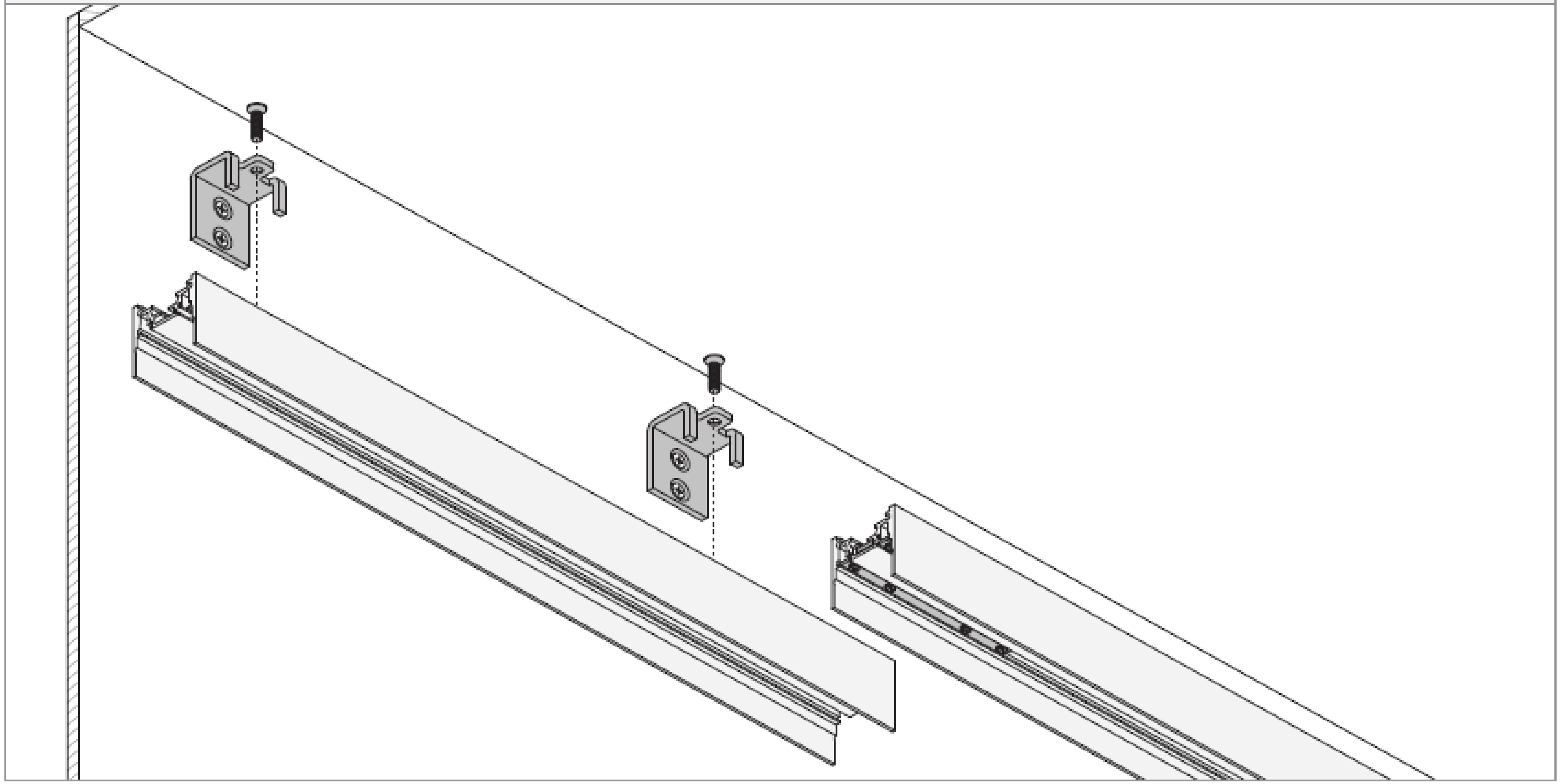

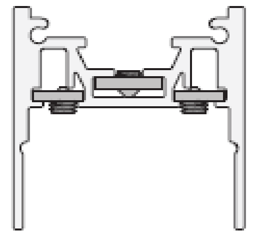

Slide all connection brackets (up and down) over both profiles and tighten.

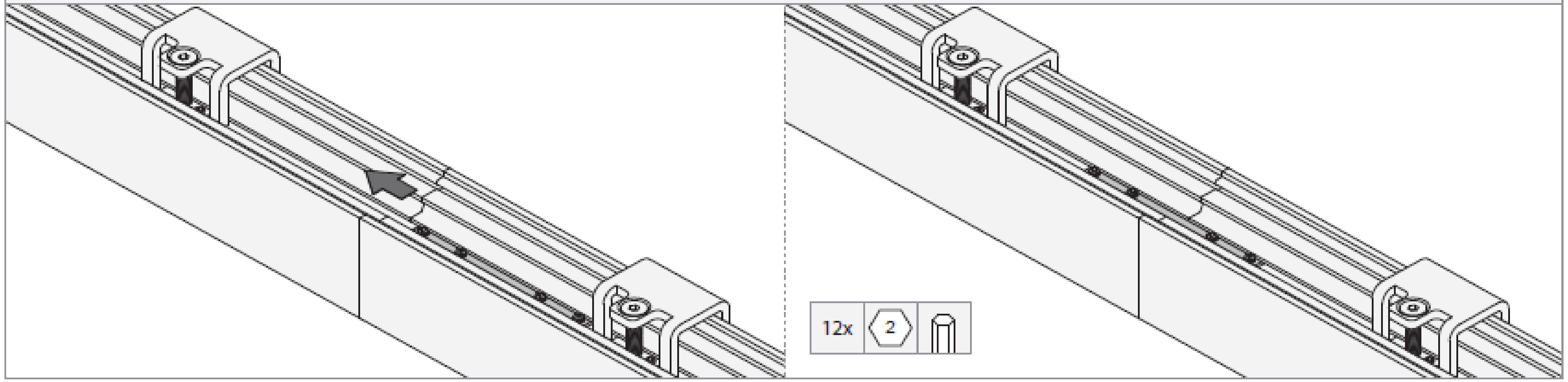

Slide the big connection bracket in the base profiles and tighten.

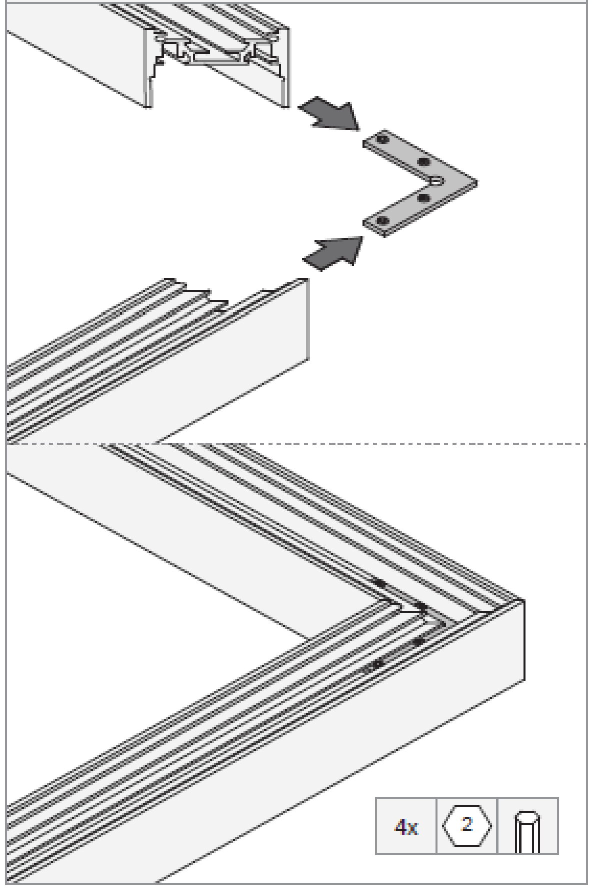

Attach the connected base profiles to the wall brackets.

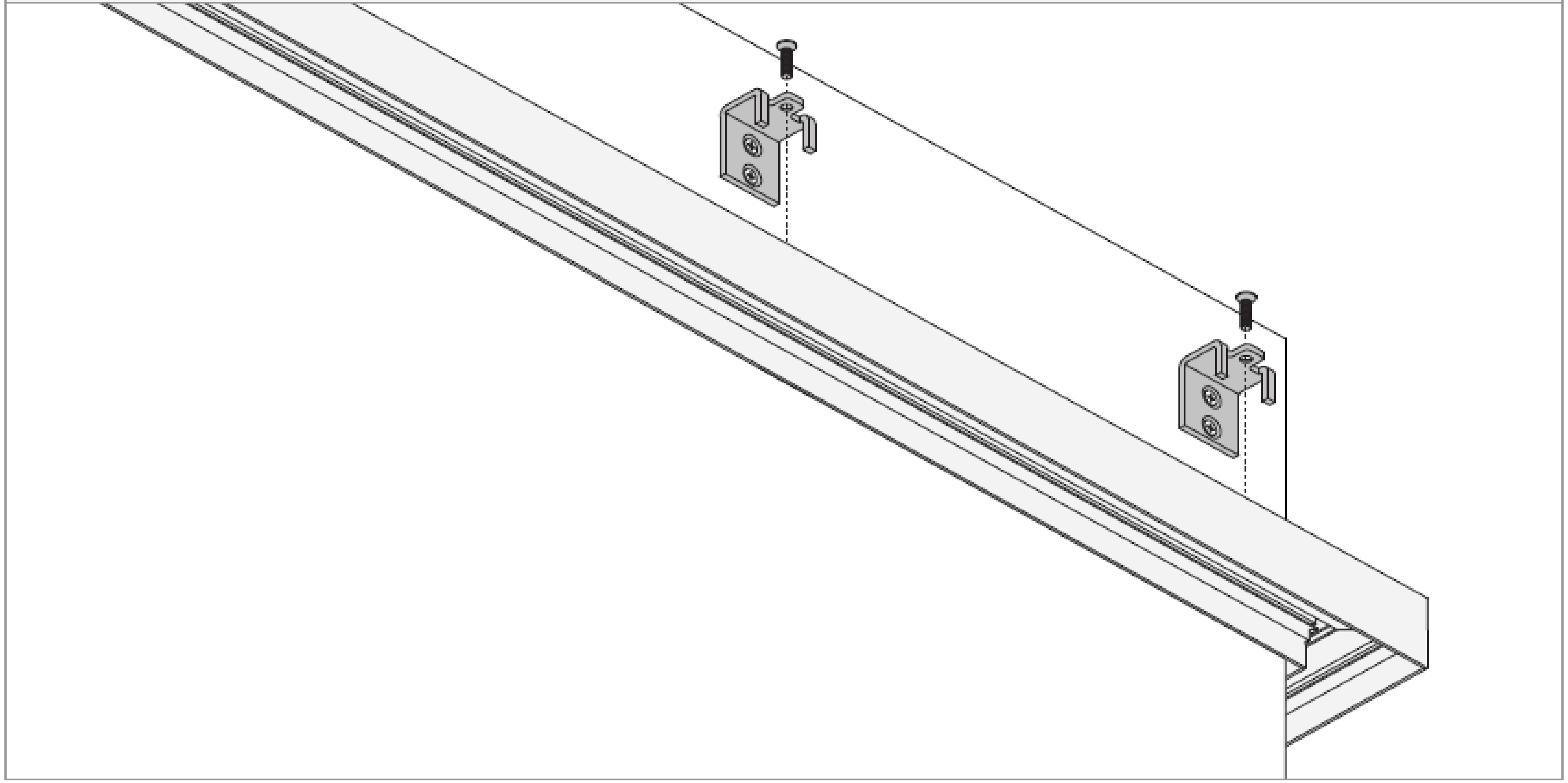

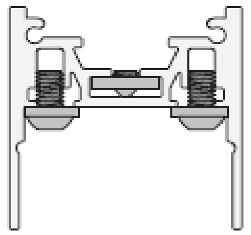

Place the narrow connection brackets over both profiles and tighten.

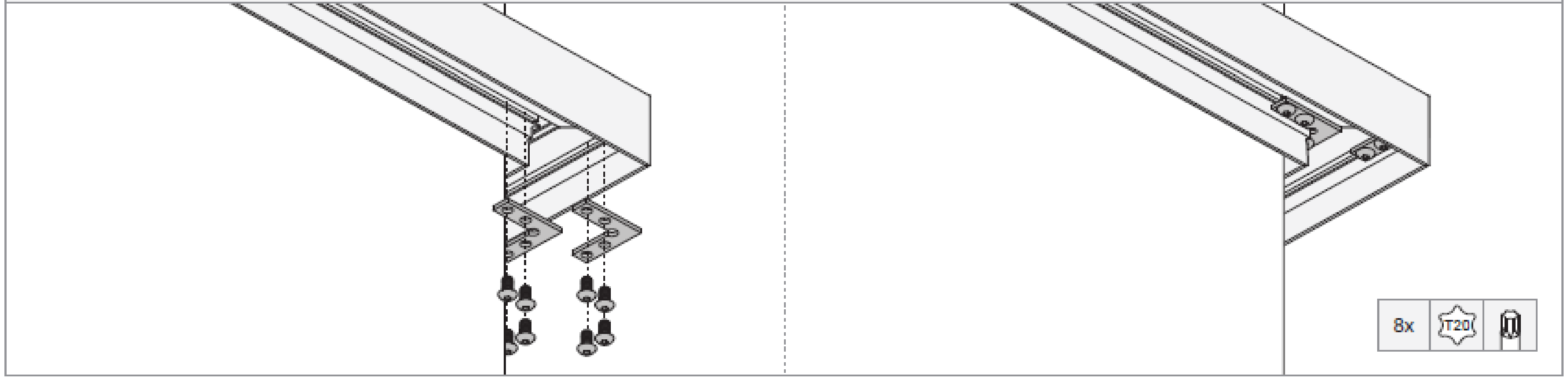

Mount the LED strip only to the designated area on the base profile.

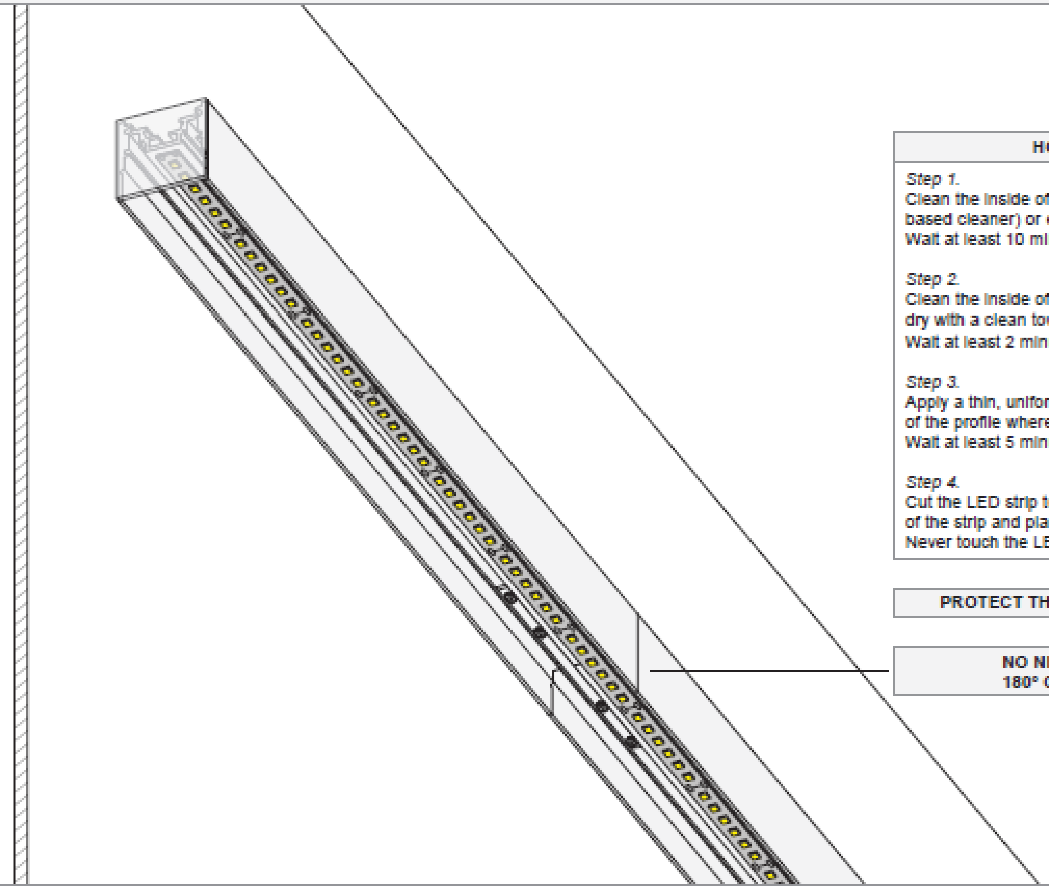

HOW TO MOUNT THE LED STRIP IN THE PROFILE

Step 1.
Clean the inside of the profile with WD-40 Industrial Cleaner or Scotch 1626 (solvent based cleaner) or equivalent and wipe dry with a clean towel.
Wait at least 10 minutes before the next step.

Step 2.
Clean the inside of the profile with XYZ (organic cleaner) or equivalent and wipe dry with a clean towel.
Wait at least 2 minutes before the next step.

Step 3.
Apply a thin, uniform coat of 3M Primer 94 (tape primer) or equivalent on the surface of the profile where the LED strip will be placed.
Wait at least 5 minutes before the next step.

Step 4.
Cut the LED strip to the correct length. Peel a part of the adhesive backing at one end of the strip and place the strip on the mounting area, work from one end to the other.
Never touch the LEDs, only push on the sides of the strip.

PROTECT THE WIRES WITH A CABLE SLEEVE TO AVOID ANY DAMAGE

NO NEED TO SPLIT THE LEDSTRIP INTO 2 PARTS IF THE 180° CONNECTION IS USED AND PROPERLY INSTALLED

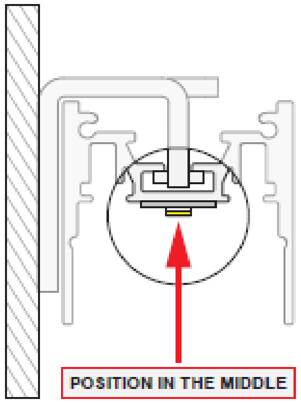

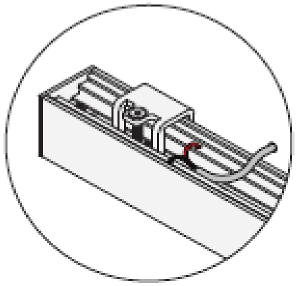

Electrical connection.

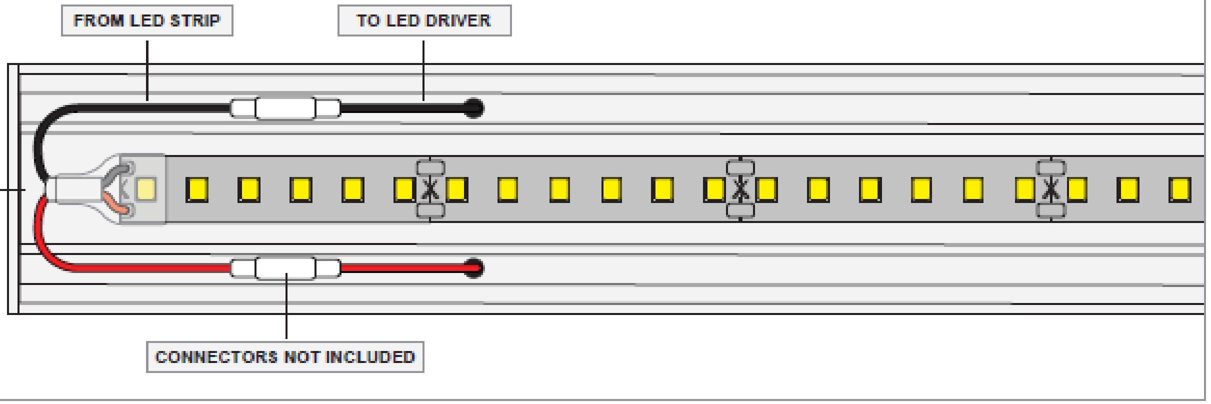

MOUNTING SURFACE MUST BE SMOOTH, CLEAN, DRY AND FREE FROM OIL, WAXES OR GREASE

⚠

SEE INDIVIDUAL LED STRIP INSTALLATION INSTRUCTION FOR ALL MECHANICAL FEATURES (CUTTING, MOUNTING ...)

⚠

SEE INDIVIDUAL LED STRIP INSTALLATION INSTRUCTION FOR ALL ELECTRICAL FEATURES (RATINGS, CONNECTIONS ...)

Finish the installation, click the diffuser(s) back in the base profile.

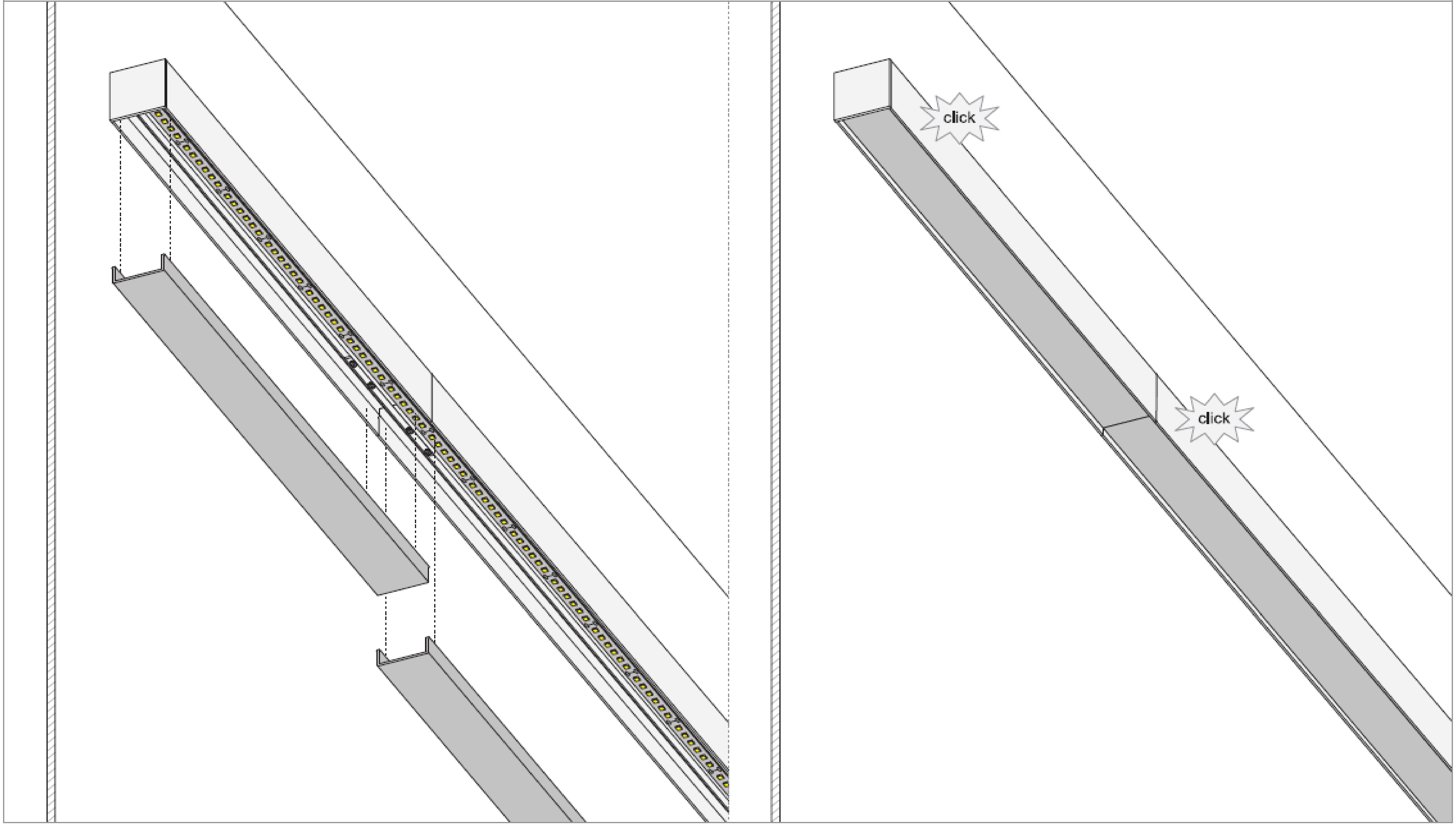
click
click

Add the steel cables to the profile.

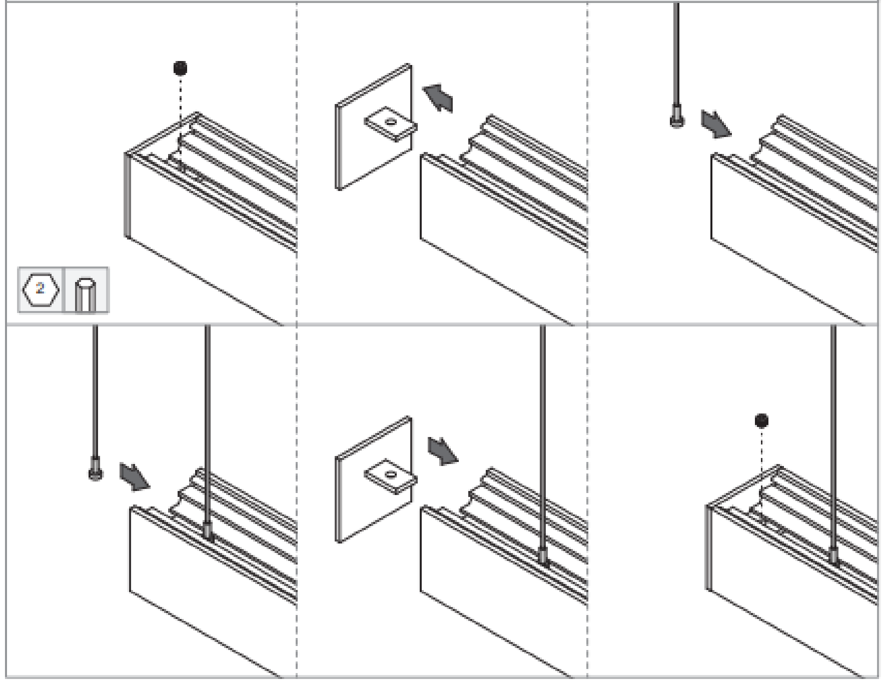

Mount the cable holders to the ceiling.

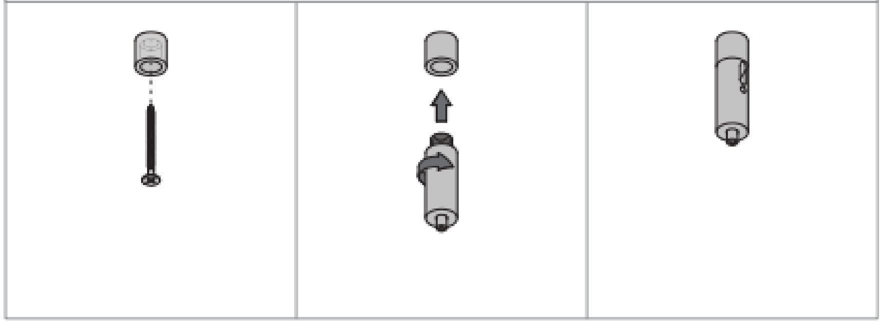

Cable holders can be combined with additional hinges for sloped ceilings (optional).

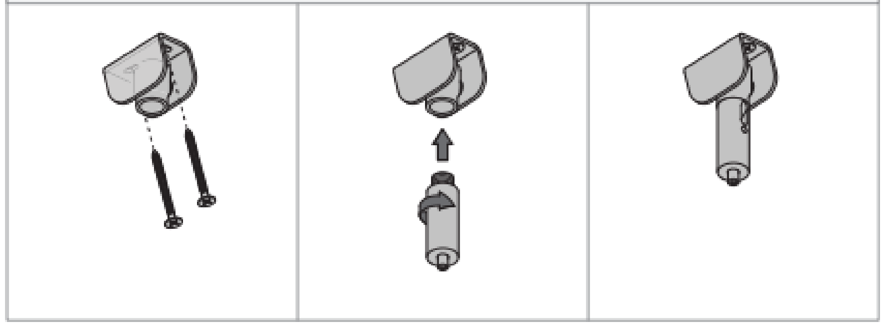

Dimensions.

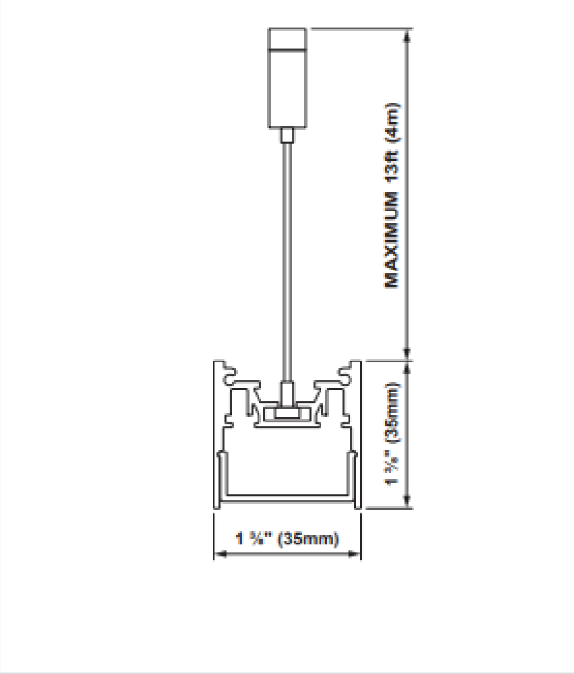
MAXIMUM 13ft (4m)
1 3/8" (35mm)
1 3/8" (35mm)

Mount the base profile with LED strip and diffuser.

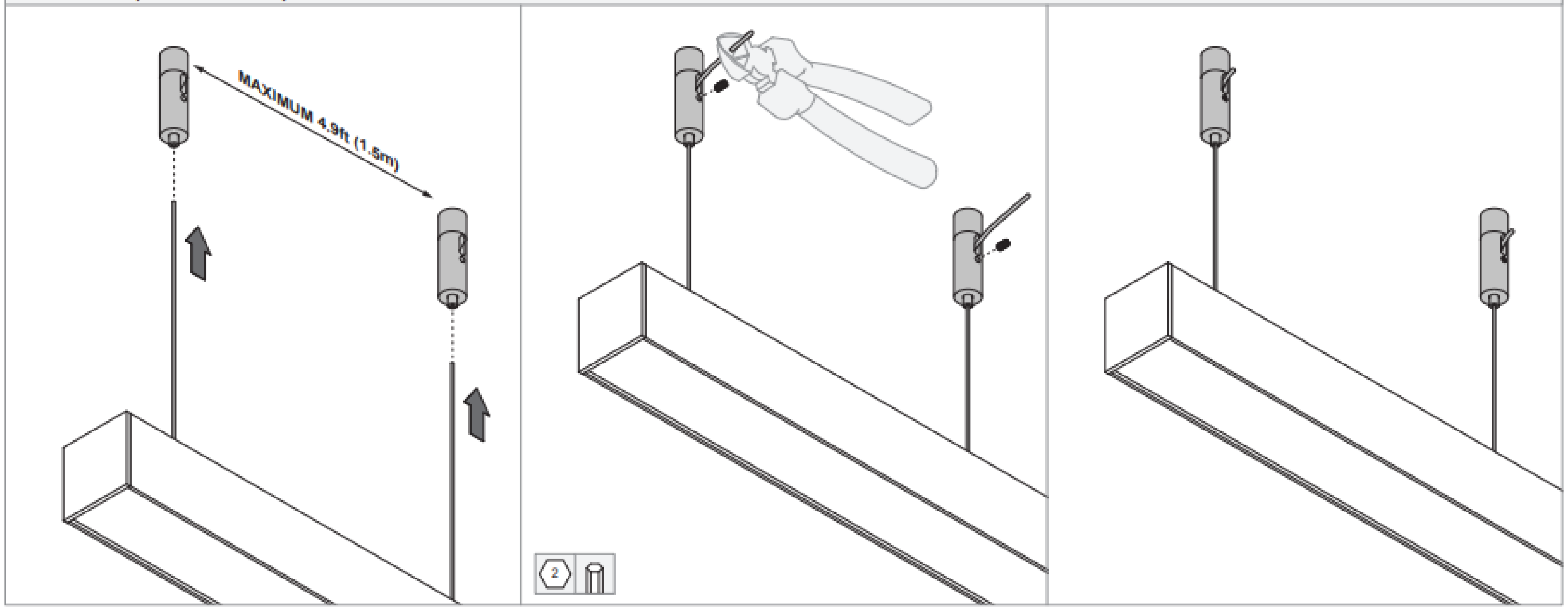
MAXIMUM 4.9ft (1.5m)
2

Mounting screws (not included).

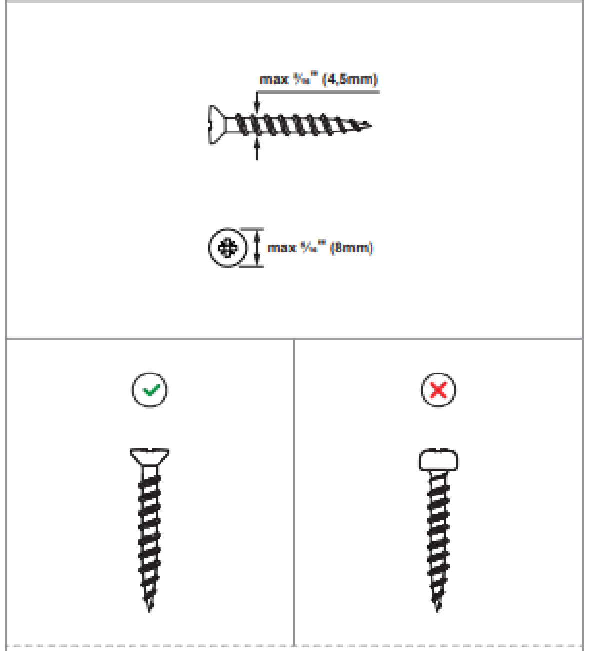
max 3/16" (4,5mm)
max 5/16" (8mm)
✓
✗

Screw into studs or use an appropriate anchoring system.

Power cable.

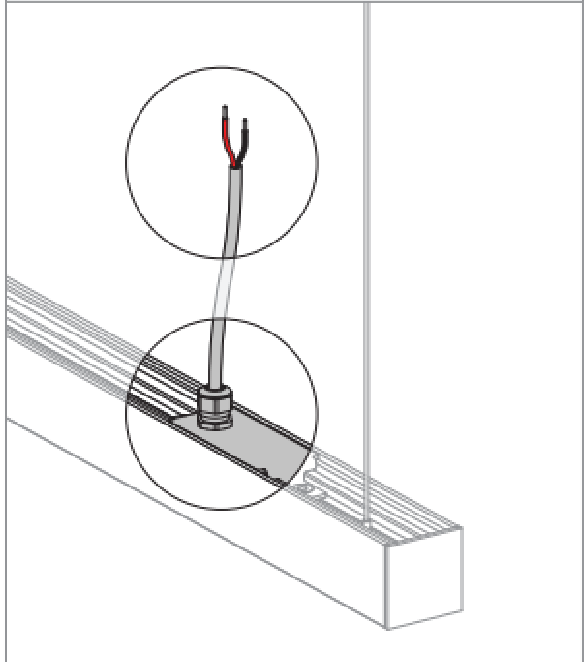

⚠ Connect the power cable directly to a surface mounted power supply, or add the canopy to connect to a remote power supply.

⚠ Do not disconnect the power cable from the cable gland. Do not disconnect the cable gland from the base profile.

Canopy strain relief.

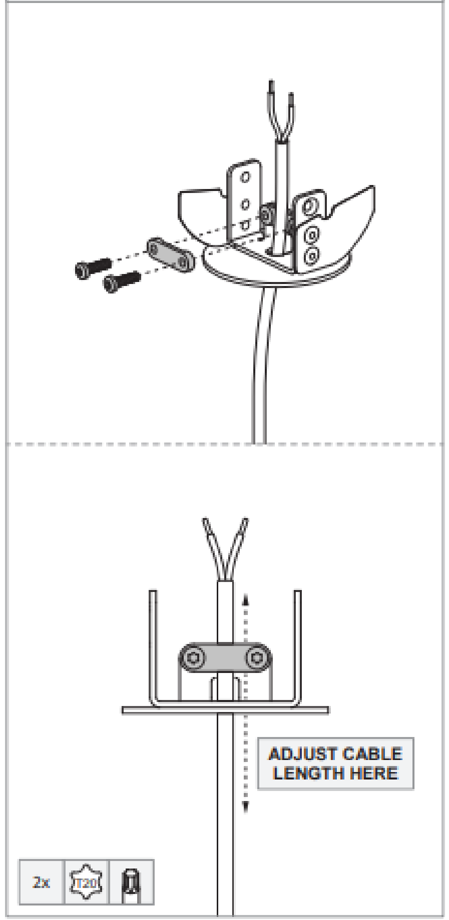

Canopy installation with plaster plate (for 4x4 octagonal junction box).

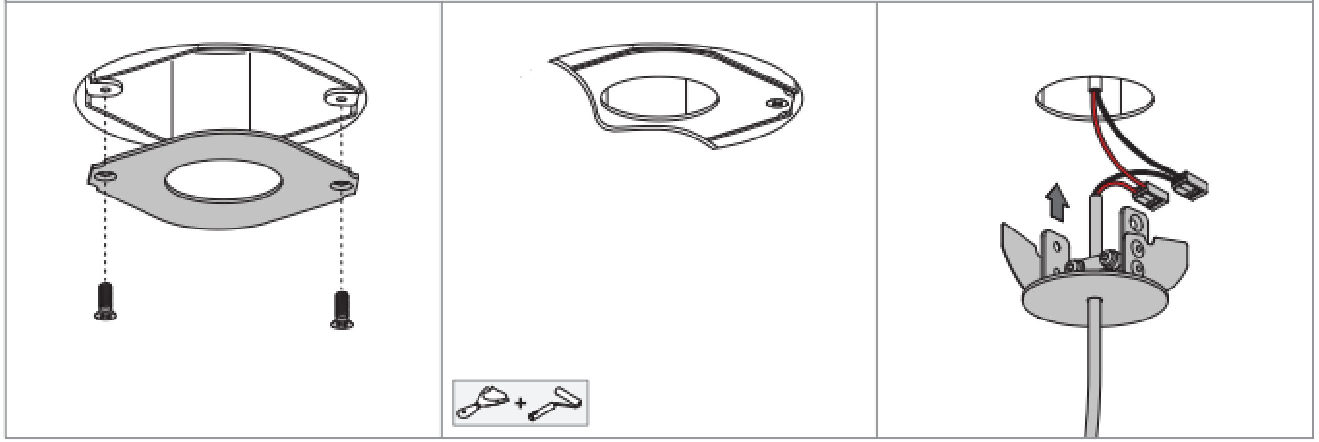

Canopy installation with backplate (for 4x4 octagonal junction box).

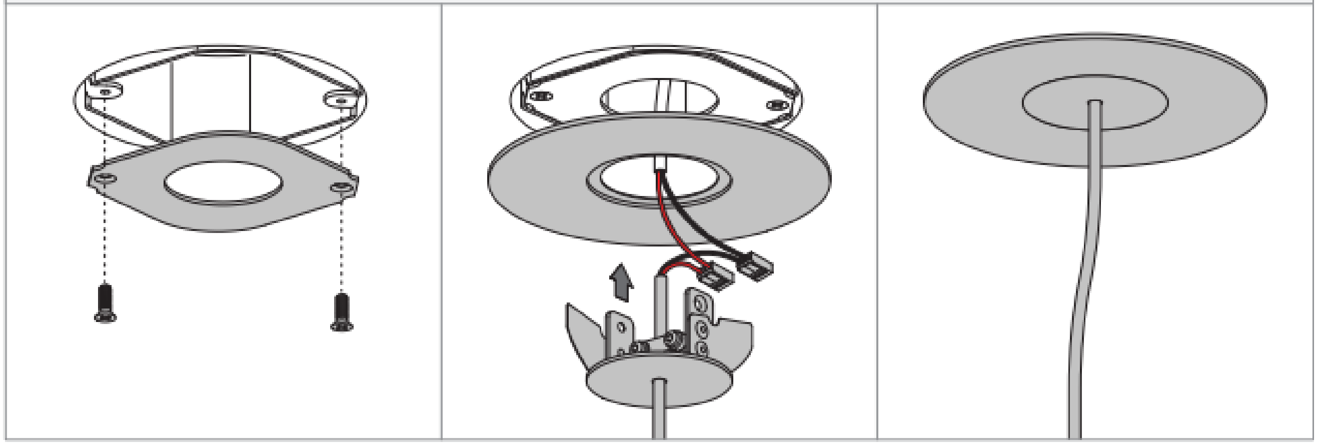

Electrical connection.

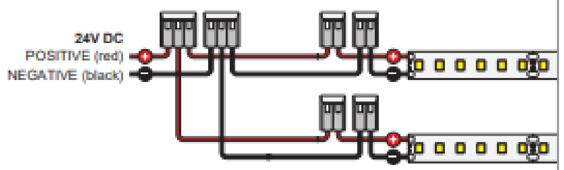

⚠ Make sure power is off when making or changing electrical connections. Respect the polarity. Always use a parallel connection for multiple luminaires on a single power unit. Use only with a class 2 power unit.

Cut-out size.

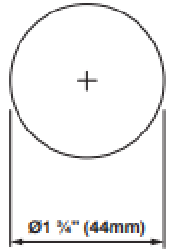

Canopy installation with connection box (for installation without junction box).

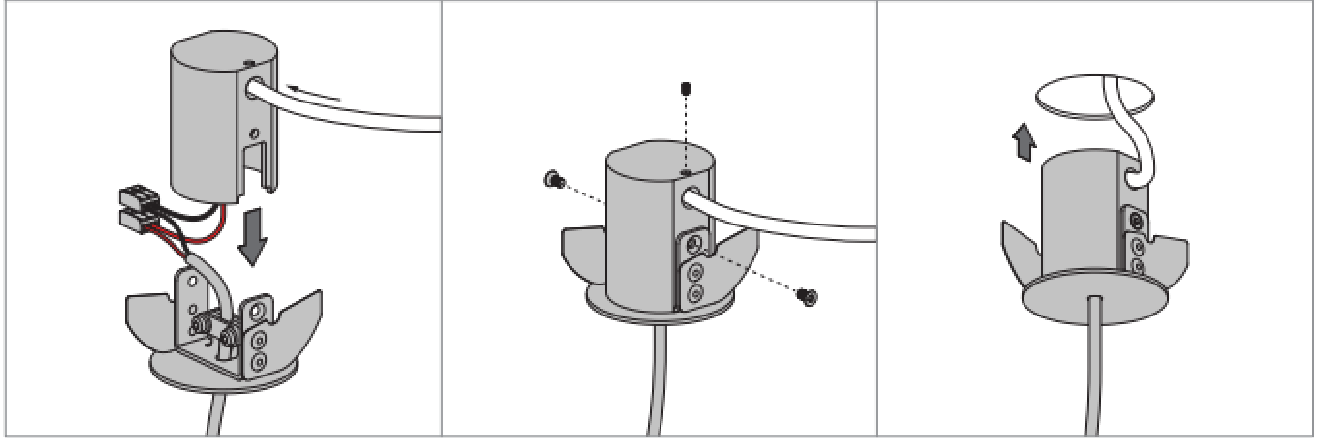

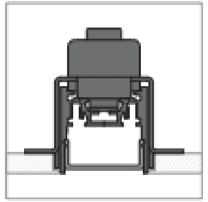

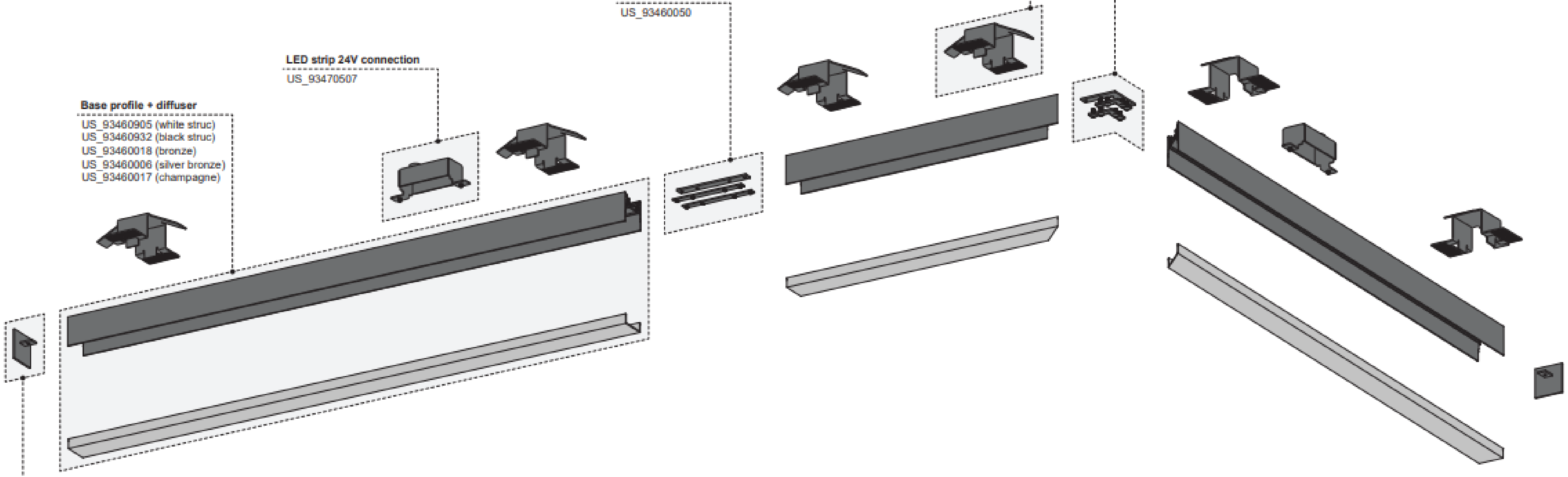

Base profile + diffuser

US_93460905 (white struc)
US_93460932 (black struc)
US_93460018 (bronze)
US_93460006 (silver bronze)
US_93460017 (champagne)

LED strip 24V connection

US_93470507

Connection 180°

US_93460050

Trimless bracket

US_93460996

Connection 90°

US_93460060

Endplate

US_93469181 (white struc)
US_93468181 (black struc)
US_93468118 (bronze)
US_93468106 (silver bronze)
US_93468117 (champagne)

LED strip options
(not mounted by Modular)

US_93000032 (2700K) (1000lm/m) (3m)
US_93000033 (3000K) (1000lm/m) (3m)
US_93000034 (3500K) (1000lm/m) (3m)
US_93000016 (2700K) (1000lm/m) (5m)
US_93000017 (3000K) (1000lm/m) (5m)
US_93000018 (3500K) (1000lm/m) (5m)
US_93000035 (2700K) (2000lm/m) (3m)
US_93000036 (3000K) (2000lm/m) (3m)
US_93000037 (3500K) (2000lm/m) (3m)
US_93000026 (2700K) (2000lm/m) (5m)
US_93000027 (3000K) (2000lm/m) (5m)
US_93000028 (3500K) (2000lm/m) (5m)

LED strip options
(mounted by Modular)

US_93000540 (2700K) (1000lm/m)
US_93000541 (3000K) (1000lm/m)
US_93000546 (3500K) (1000lm/m)
US_93000004 (2700K) (2000lm/m)
US_93000005 (3000K) (2000lm/m)
US_93000051 (3500K) (2000lm/m)

For conversion
(meters to feet)

1m = 3.28ft

Dimensions.

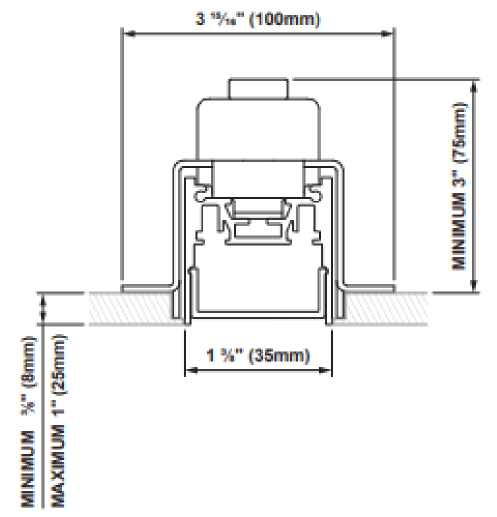
3 15/16" (100mm)
MINIMUM 3" (75mm)
1 3/8" (35mm)
MINIMUM 5/16" (8mm)
MAXIMUM 1" (25mm)

Make the supply connection.

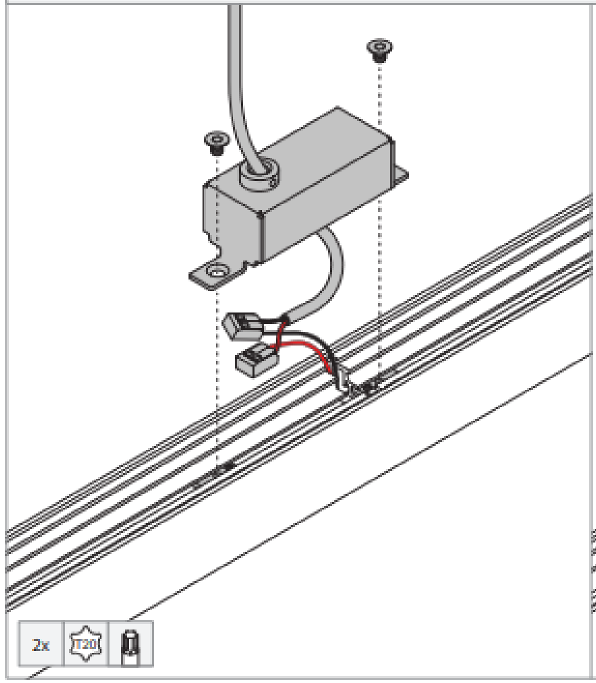

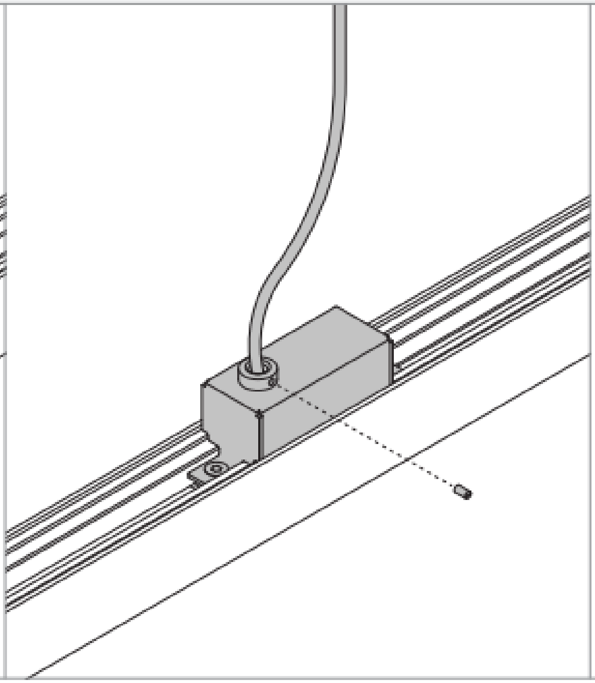

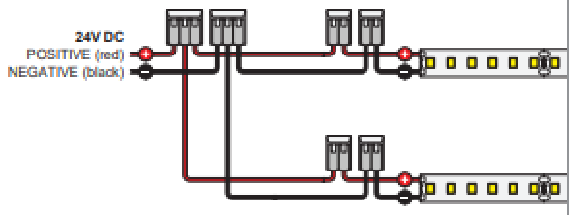
24V DC
POSITIVE (red)
NEGATIVE (black)

⚠ Make sure power is off when making or changing electrical connections. Respect the polarity.
Always use a parallel connection for multiple luminaires on a single power unit.
Use only with a class 2 power unit.

Cut-out size.

ACCESS ABOVE CEILING REQUIRED

LENGTH
PROFILE LENGTH + 3/16" (4mm)

WIDTH
MINIMUM 1 9/16" (39mm)
MAXIMUM 1 5/8" (41mm)

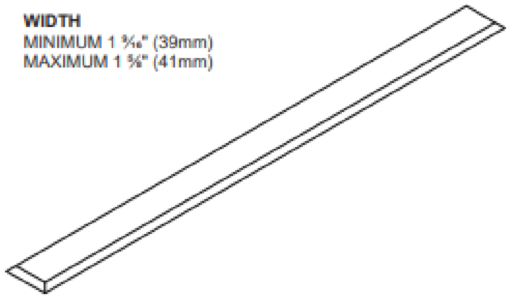

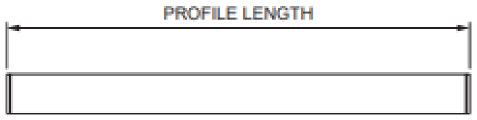
PROFILE LENGTH

Mount the base profile with LED strip, finish the ceiling and add the diffuser.

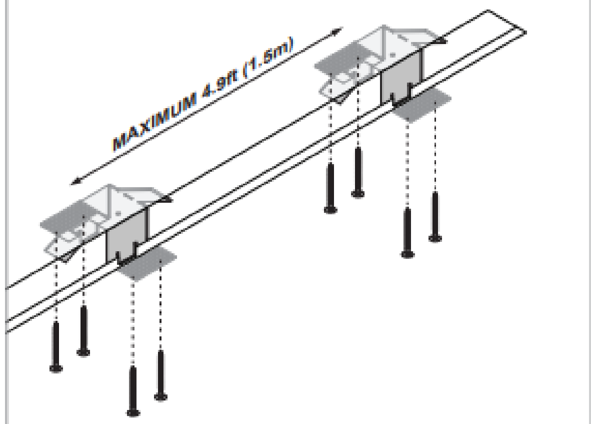
MAXIMUM 4.9ft (1.5m)

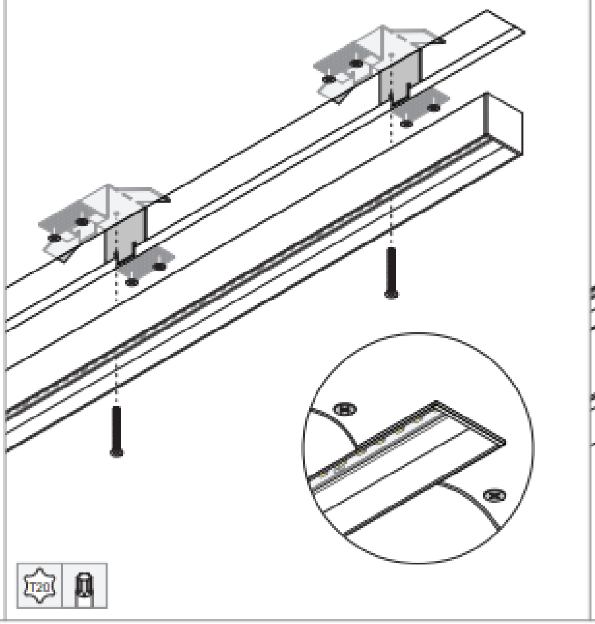

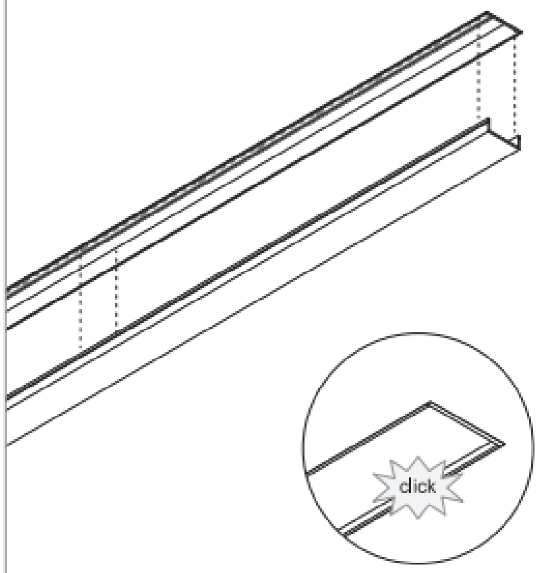

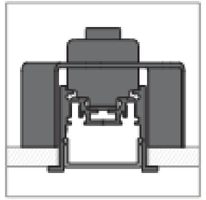

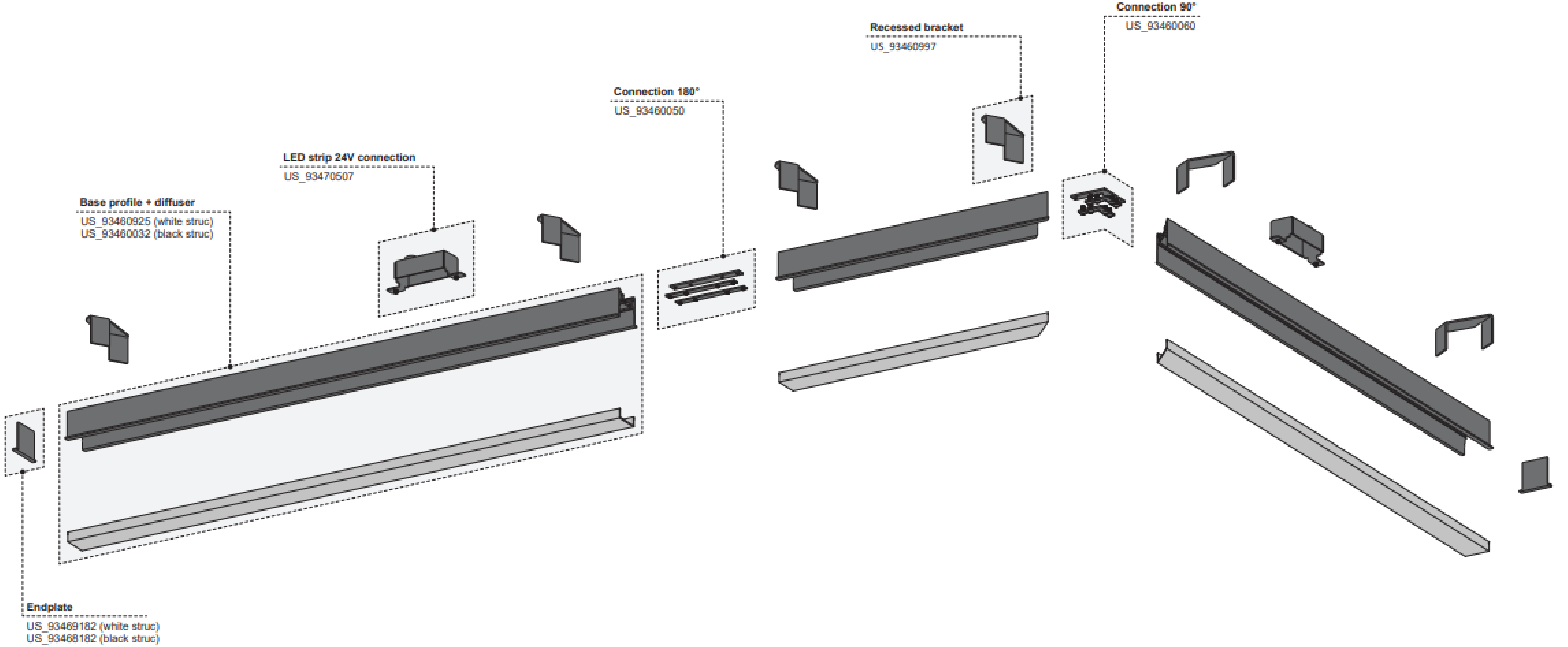
Connection 90°
US_93460060
Recessed bracket
US_93460997
Connection 180°
US_93460050
LED strip 24V connection
US_93470507
Base profile + diffuser
US_93460925 (white struc)
US_93460032 (black struc)
Endplate
US_93469182 (white struc)
US_93468182 (black struc)

LED strip options
(not mounted by Modular)

US_93000032 (2700K) (1000lm/m) (3m)
US_93000033 (3000K) (1000lm/m) (3m)
US_93000034 (3500K) (1000lm/m) (3m)
US_93000016 (2700K) (1000lm/m) (5m)
US_93000017 (3000K) (1000lm/m) (5m)
US_93000018 (3500K) (1000lm/m) (5m)
US_93000035 (2700K) (2000lm/m) (3m)
US_93000036 (3000K) (2000lm/m) (3m)
US_93000037 (3500K) (2000lm/m) (3m)
US_93000026 (2700K) (2000lm/m) (5m)
US_93000027 (3000K) (2000lm/m) (5m)
US_93000028 (3500K) (2000lm/m) (5m)

LED strip options
(mounted by Modular)

US_93000540 (2700K) (1000lm/m)
US_93000541 (3000K) (1000lm/m)
US_93000546 (3500K) (1000lm/m)
US_93000004 (2700K) (2000lm/m)
US_93000005 (3000K) (2000lm/m)
US_93000051 (3500K) (2000lm/m)

For conversion
(meters to feet)

1m = 3.28ft

Dimensions.

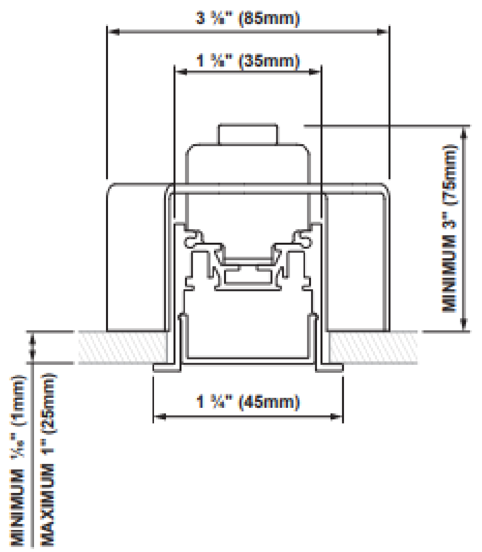
3 ⅜" (85mm)
1 ⅜" (35mm)
MINIMUM 3" (75mm)
1 ¾" (45mm)
MINIMUM 1⁄16" (1mm)
MAXIMUM 1" (25mm)

Make the supply connection.

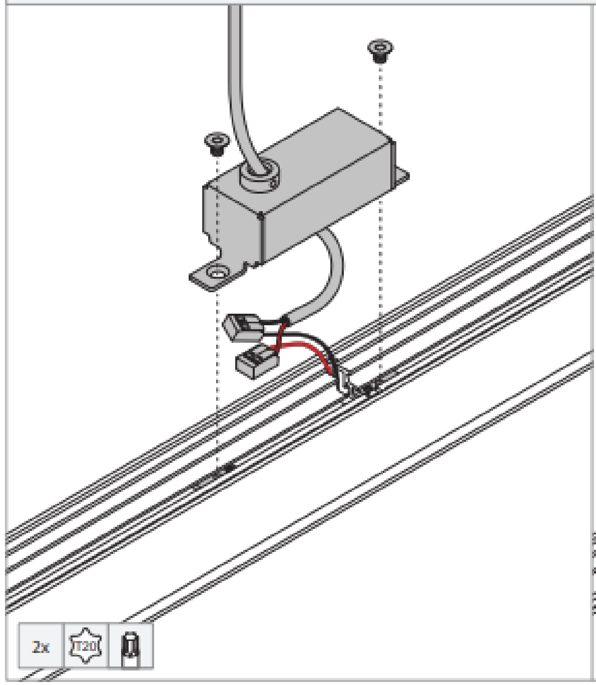

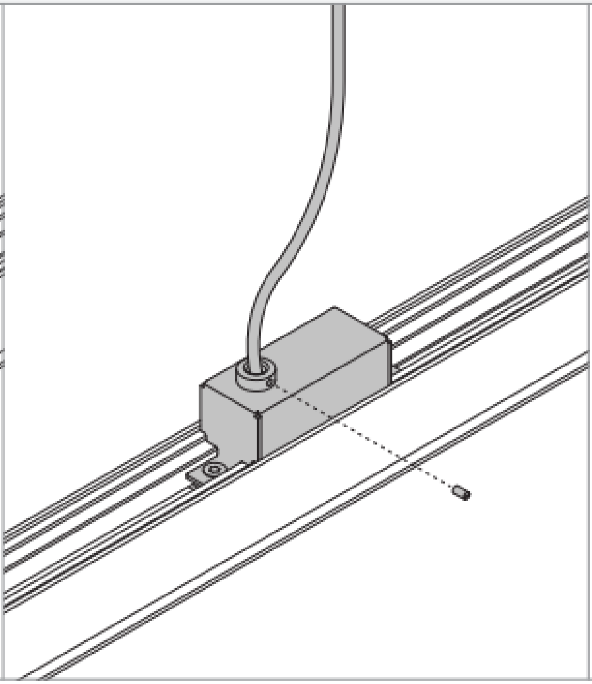

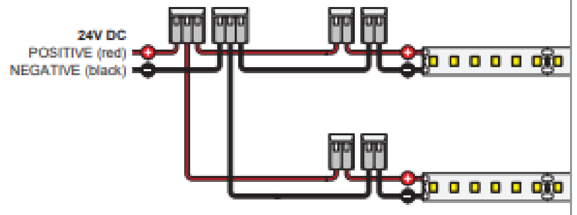
24V DC
POSITIVE (red)
NEGATIVE (black)

⚠ Make sure power is off when making or changing electrical connections. Respect the polarity.
Always use a parallel connection for multiple luminaires on a single power unit.
Use only with a class 2 power unit.

Cut-out size.

LENGTH
PROFILE LENGTH + 3⁄16" (4mm)

WIDTH
MINIMUM 1 9⁄16" (39mm)
MAXIMUM 1 ⅝" (41mm)

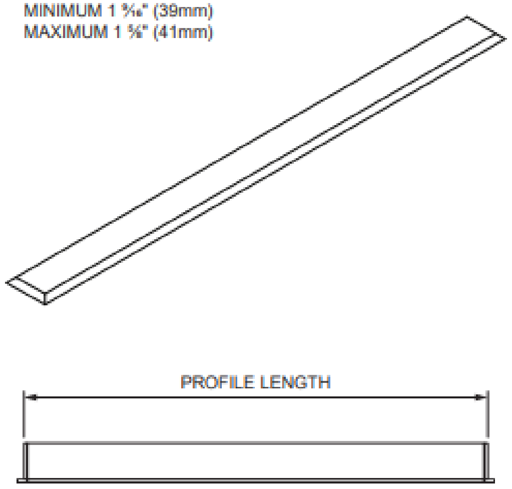
PROFILE LENGTH

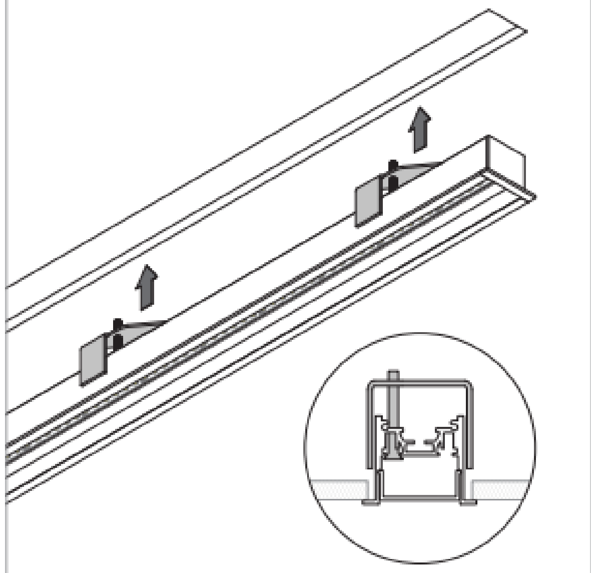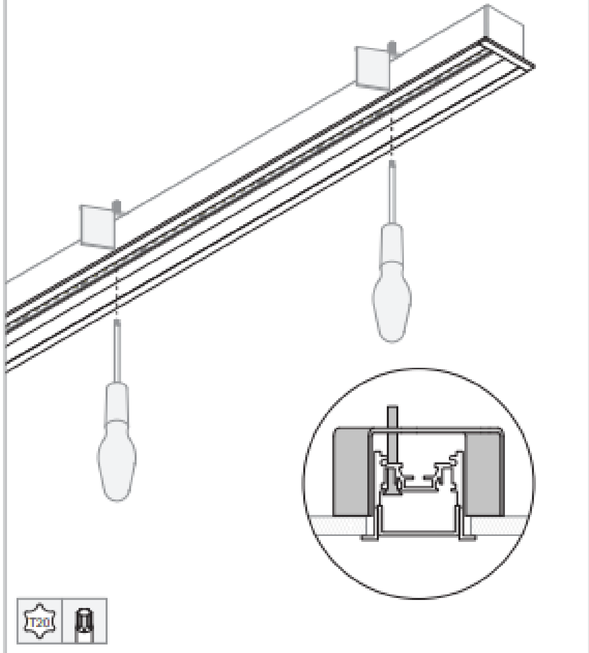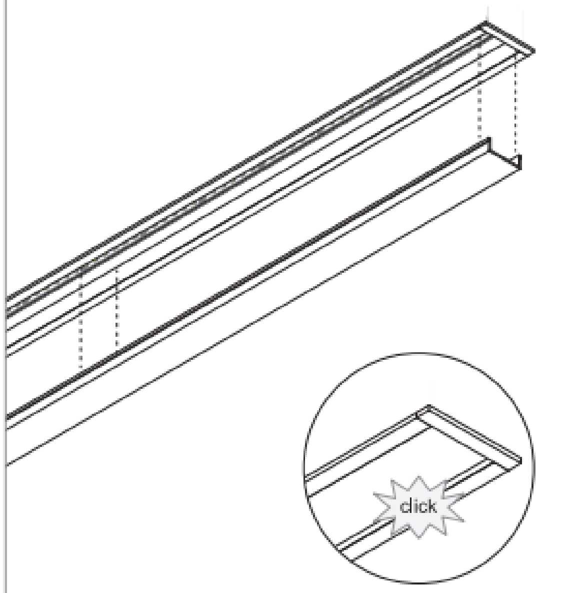Mount the base profile with LED strip and add the diffuser.