# Smart

MODULAR
LIGHTING
INSTRUMENTS
— by MLI NA Corporation

# Smart

Intelligent design, attractive finesse

# About Smart

- One spotlight family, customisable to any space
- Versatility in orientation, accent and general lighting
- Mix and match form, size, color and mounting

# Market segments

- High-end residential
- Hospitality
- Retail
- Office
- Public spaces

# Design

MODULAR
LIGHTING —
INSTRUMENTS

# Designs

Smart **cake**

Smart **lotis**

Smart **kup**

# Sizes

Ø 1.9 inch

Ø 3.2 inch

Ø 4.5 inch

MODULAR LIGHTING INSTRUMENTS
by MLI NA Corporation

# Producttypes

Fixed
Ø 1.9, 3.2 and 4.5 inch

Adjustable
Ø 3.2 and 4.5 inch
H 355° V 30°

# Finishes

All sizes

Black structure

White structure

Gold matt

Only for
Smart 3.2 Fix + Adj
Smart 1.9

Black brushed

Bronze brushed

Champagne brushed

Silver bronze brushed

MODULAR LIGHTING INSTRUMENTS
by MLI NA Corporation

| SMART 3.2 | | | SMART 3.2 ADJ | | | SMART 1.9 | | | |
|---|---|---|---|---|---|---|---|---|---|
| LOTIS | CAKE | KUP | LOTIS | CAKE | KUP | LOTIS | CAKE | KUP | LOTIS ASY |
| | | | | | | | 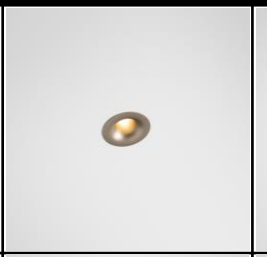 | 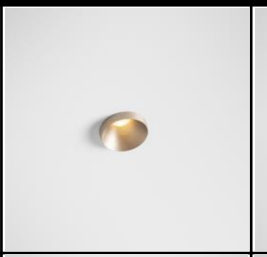 | |
| | | | | | | 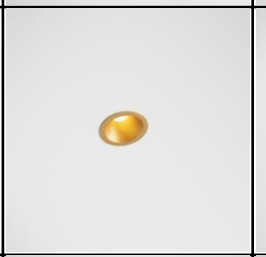 | 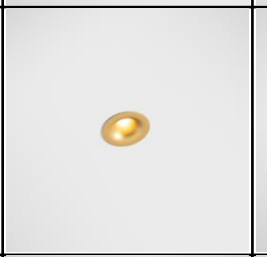 | 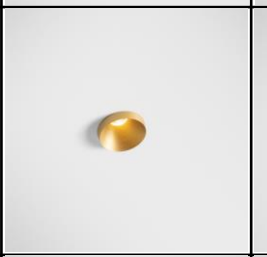 | 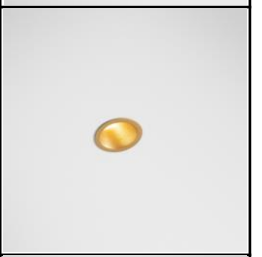 |
| | | | | | | | 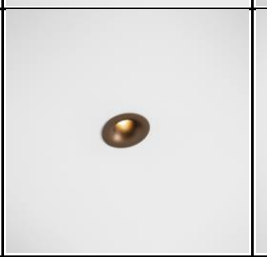 | 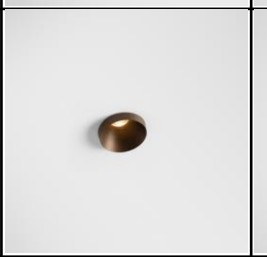 | |
| | | | | | | | 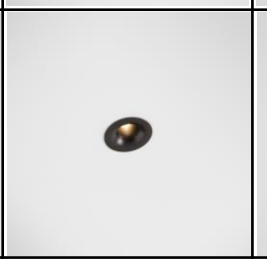 | 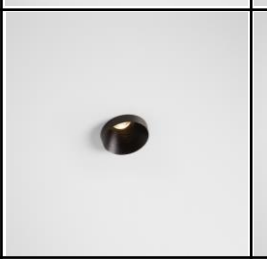 | |

MODULAR LIGHTING INSTRUMENTS
by MLI NA Corporation

# Frosted or microprismatic glass

frosted glass
for uniform, general lighting
(only with medium lens)



microprismatic glass
for soft lighting with reduced glare
(only with medium lens)

MODULAR LIGHTING INSTRUMENTS
— by MLI NA Corporation

# Smart 1.9: also available in warm dim!

3000K WARM DIM TECHNOLOGY 1800K

# Accessoires

MODULAR
LIGHTING —
INSTRUMENTS

# Accessories

# Smart mask

All sizes

Only for Smart 3.2

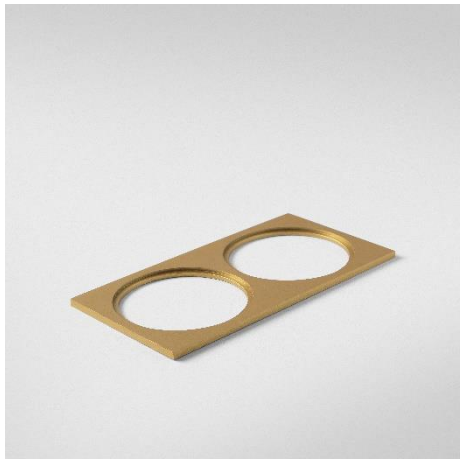

# Smart mask

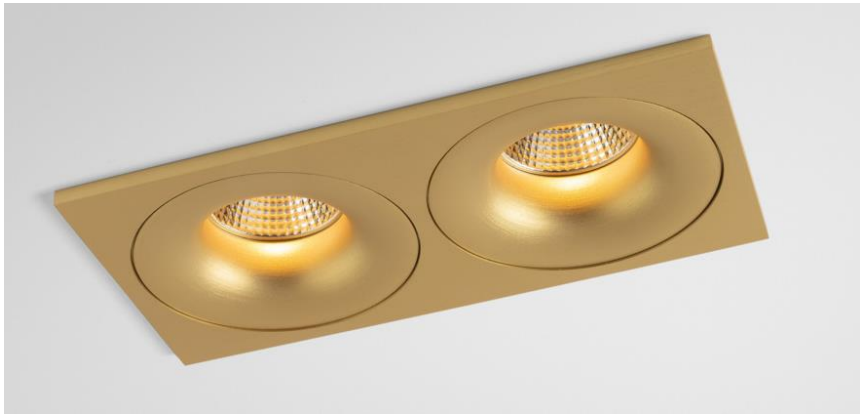

MODULAR LIGHTING INSTRUMENTS
— by MLI NA Corporation

# Smart surface box

MODULAR LIGHTING INSTRUMENTS
by MLI NA Corporation

# Configure your Smart surface box

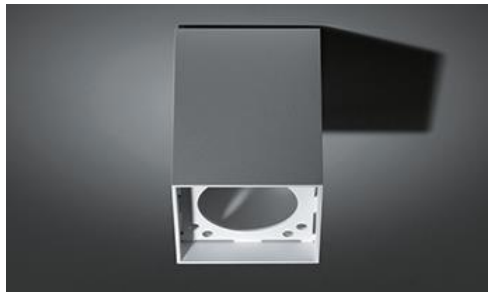

+

+

# Smart surface tubed

# Sizes

| | SMART 1.9<br>FIXED | | SMART 3.2<br>FIXED/ADJUSTABLE | SMART 4.5<br>FIXED/ADJUSTABLE |
|---|---|---|---|---|
| **1 LAMPS** | 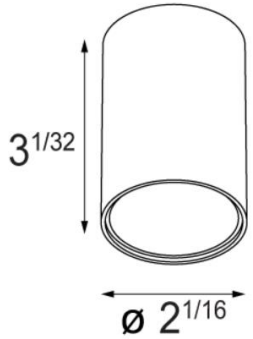 | **LARGE** | 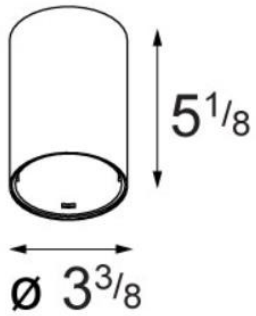 | 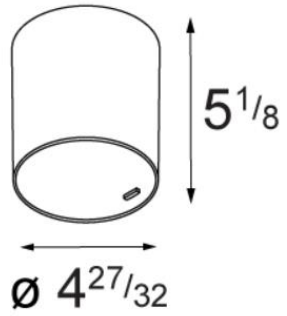 |
| | | **X-LARGE** | 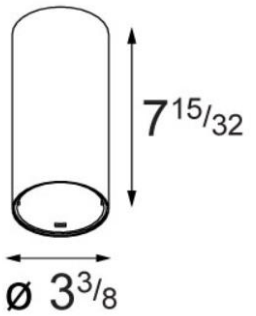 | |

MODULAR LIGHTING INSTRUMENTS
by MLI NA Corporation

# Smart tubed suspension

MODULAR LIGHTING INSTRUMENTS
— by MLI NA Corporation

# Sizes

| **SMART 1.9**<br>FIXED | **SMART 3.2**<br>FIXED/ADJUSTABLE | **SMART 4.5**<br>FIXED/ADJUSTABLE |
|---|---|---|
| 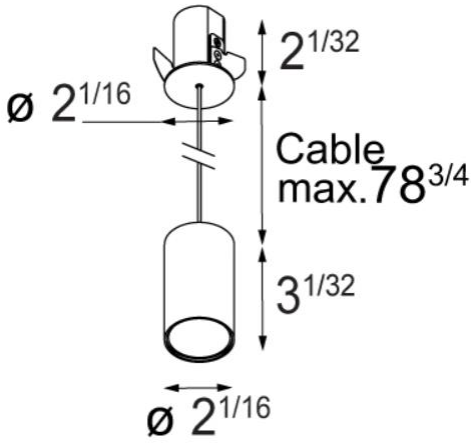 | 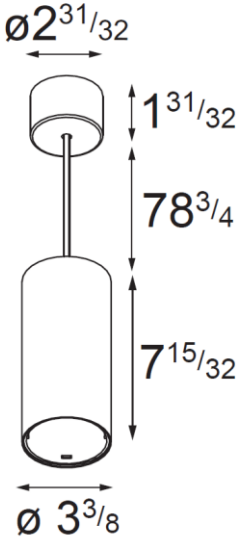 | 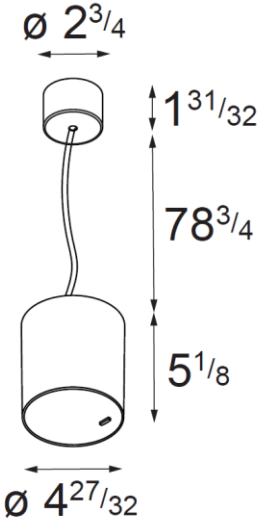 |

MODULAR LIGHTING INSTRUMENTS
by MLI NA Corporation

# Smart tubed wall

MODULAR LIGHTING INSTRUMENTS
— by MLI NA Corporation

# Sizes

| | SMART 1.9<br>FIXED | | SMART 3.2<br>FIXED/ADJUSTABLE | SMART 4.5<br>FIXED/ADJUSTABLE |
|---|---|---|---|---|
| **1 LAMPS** | 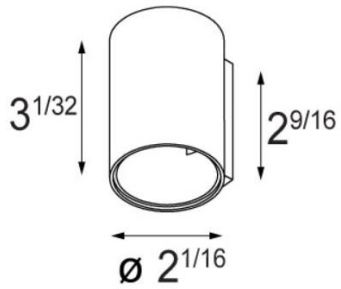 | **LARGE** | 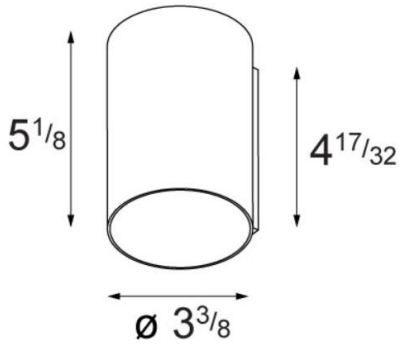 | |
| **2 LAMPS** | 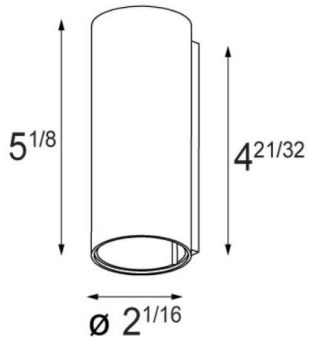 | **X-LARGE** | 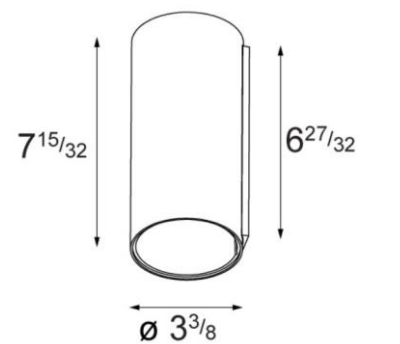 | |

# Smart tubed 48 track 48V

- Tube: black struc, white struc
- Smart: black struc, white struc, gold
- Designs: Lotis, Cake or Kup

**Track 48V 1x**

**Track 48V 2x**

**Track 48V suspension 1x**

MODULAR LIGHTING INSTRUMENTS
by MLI NA Corporation

# Overview

| | SMART 1.9<br>FIXED | SMART 3.2<br>FIXED/ADJUSTABLE | SMART 4.5<br>FIXED/ADJUSTABLE |
|---|---|---|---|
| MASK | | | |
| SURFACE BOX | | | |
| SURFACE TUBED | | 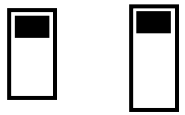 | |
| TUBED SUSPENDED | 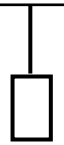 | 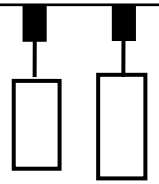 | 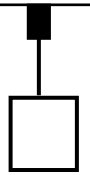 |
| TUBED WALL | 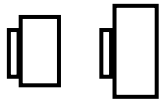 | 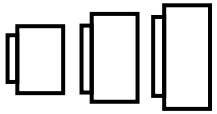 | |

= driver included

MODULAR LIGHTING INSTRUMENTS
— by MLI NA Corporation

# Recessed installation of Smart 1.9 now also with remote driver

| | HOUSING | REMOTE DRIVER (NEW) |
|---|---|---|
| NON-IC | 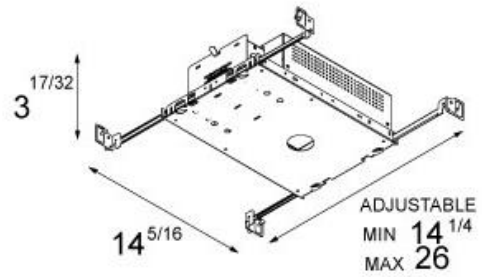 | 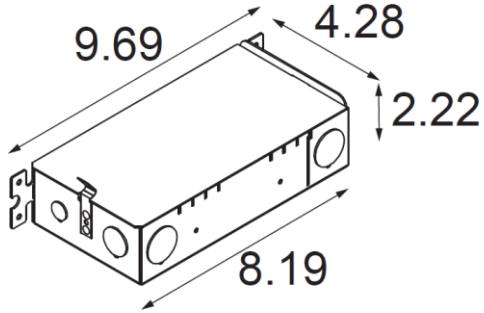 |
| IC | 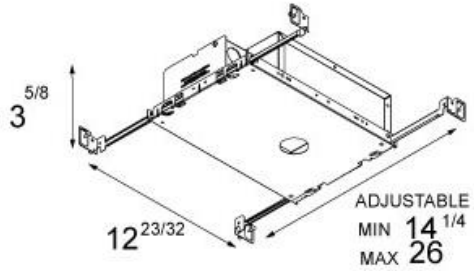 | 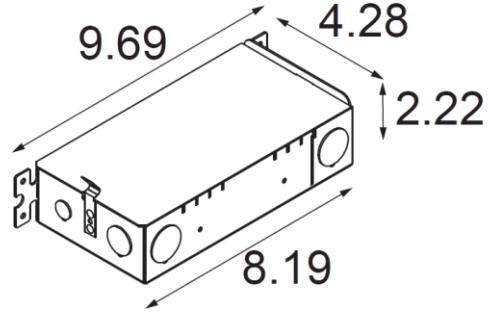 |

MODULAR LIGHTING INSTRUMENTS
by MLI NA Corporation

1

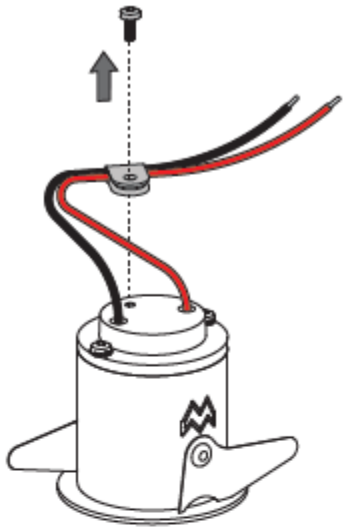

REMOVE PLASTIC PART FROM LIGHT ENGINE

2

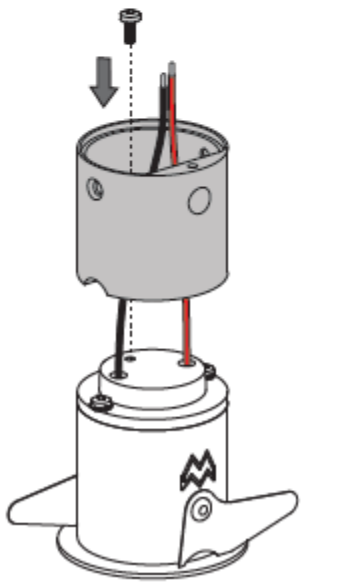

RE-USE SCREW FROM LIGHT ENGINE

3

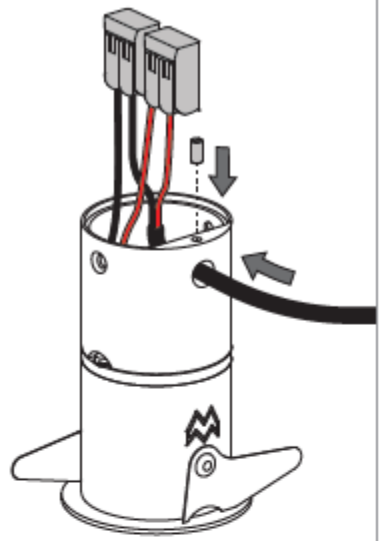

MAX 500mA DC

0" ½" (11mm)

0,2 - 4mm²
24 - 12 AWG

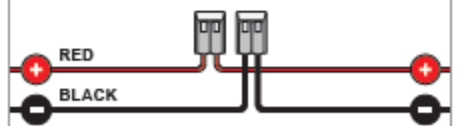


ELECTRICAL RATINGS, SEE INDIVIDUAL MANUAL

RESPECT POLARITY

4

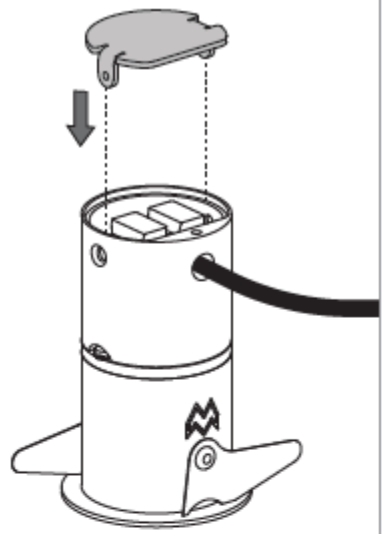

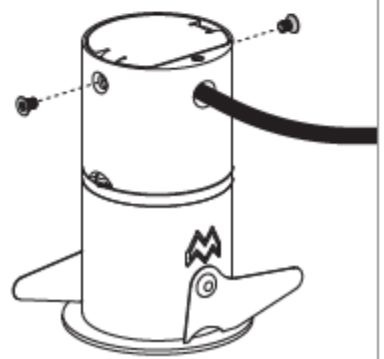

5

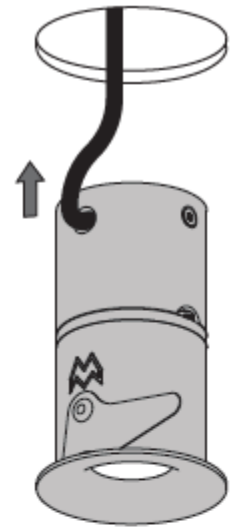

6

**IMPORTANT SAFETY INSTRUCTIONS**

- Read all instructions.
- Save these instructions.

**BASIC SAFETY PRECAUTIONS**

- Suitable for wet locations
- Input: maximum 0.50A
- Inherently protected
- Not for use in dwellings
- For supply connections use wire rated for at least 110°C (230°F)

**MOUNTING**

- Recessed - type IC

**PREVENTING ELECTROSTATIC DAMAGE**

A discharge of static electricity may damage sensitive components. Always be properly grounded when touching leads or circuitry inside the luminaire. Use a wrist strap connected by a ground cord to the housing. Avoid touching the light sources with bare hands.

**MUST BE COMBINED WITH** **(NOT INCLUDED)**

- Smart 1.9 Cake, Kup, Lotis or Asy Lotis '+' light engine (1x)

**LIGHT ENGINES, POWER SUPPLIES & ACCESSORIES**

For latest version of all light engines, power supplies and available accessories check www.supermodular.us or connect with your sales contact.

# Smart 1.9 remote driver overview

| | 0-10V/TRE DIM | 0-10V (ELDOLED) | DALI (ELDOLED) | 2-WIRE (LUTRON) | ECOSYSTEM (LUTRON) |
|---|---|---|---|---|---|
| IC | | **250mA (NEW)**<br>350mA<br>500mA | **250mA (NEW)**<br>350mA<br>500mA | | **250mA (NEW)**<br>350mA<br>500mA |
| NON IC | 350mA<br>500mA | | | **250mA (NEW)**<br>350mA<br>500mA | |

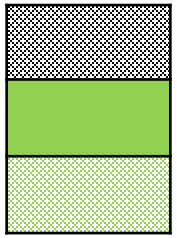

not available

available

IC also applicable

*Always check our website for the most complete and up to date specifications!*

## DESIGN

ROUND SPOTLIGHT IN 3 DIFFERENT FORMS AND 3 SIZES

FIXED AND ADJUSTABLE VERSIONS

DIFFERENT FINISHES TO EVERYONES LIKING

CLEAR, FROSTED OR MICROPRISMATIC LENS

## APPLICATION

HIGH-END RESIDENTIAL
HOSPITALITY
RETAIL
OFFICE
PUBLIC SPACES

RECESSED
SURFACE-MOUNTED
SUSPENDED
WALL-MOUNTED

DAMP AND WET LOCATIONS

## TECHNOLOGY

BROAD LUMEN PACKAGE

MULTIPLE COLOR TEMPERATURES

FROM SPOTLIGHT TO FLOOD

LEAF SPRINGS FOR EASY INSTALLATION

BIONIC HEATSINK FOR OPTIMAL HEAT DISSIPATION

REMOTE DRIVER

# Inspiration

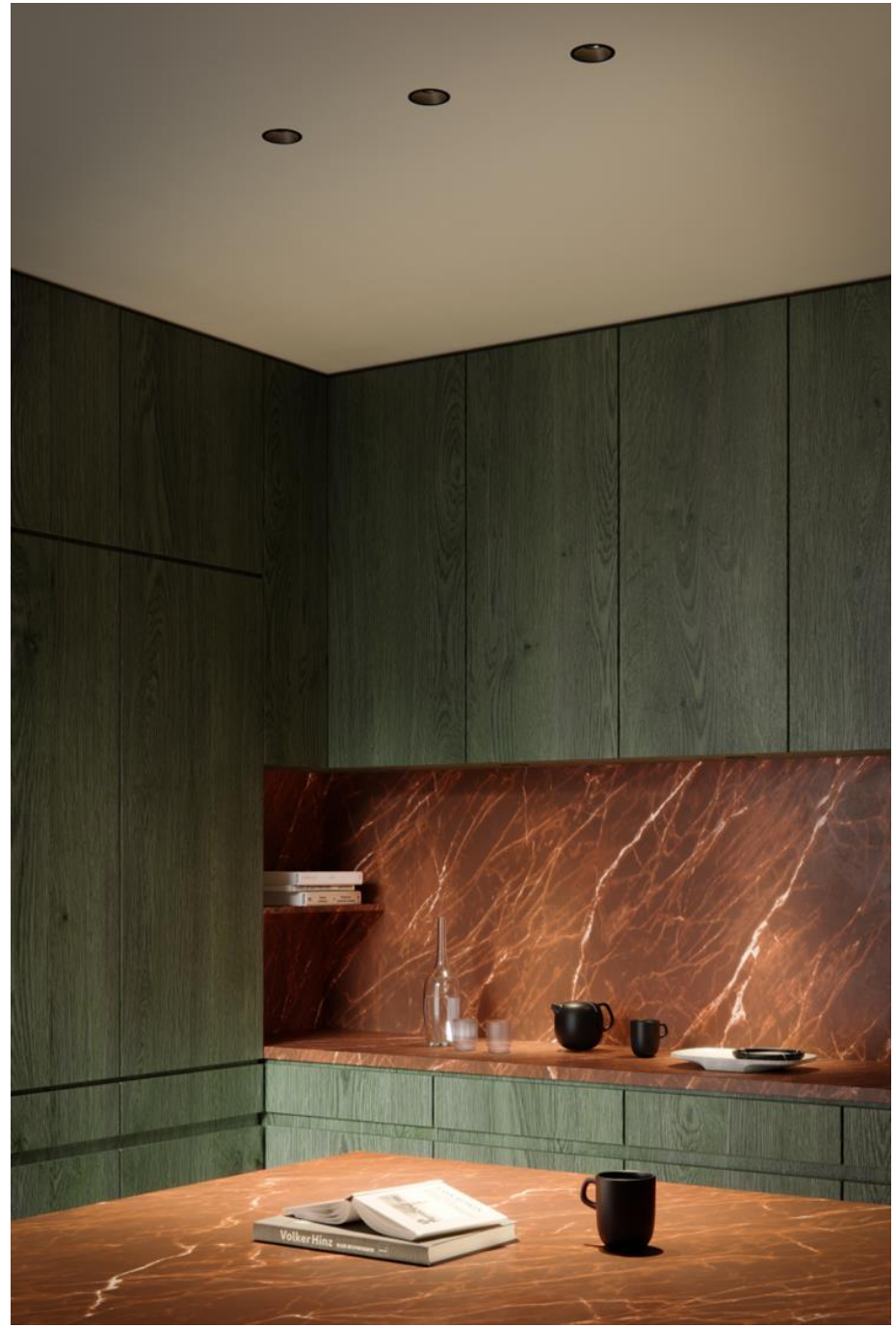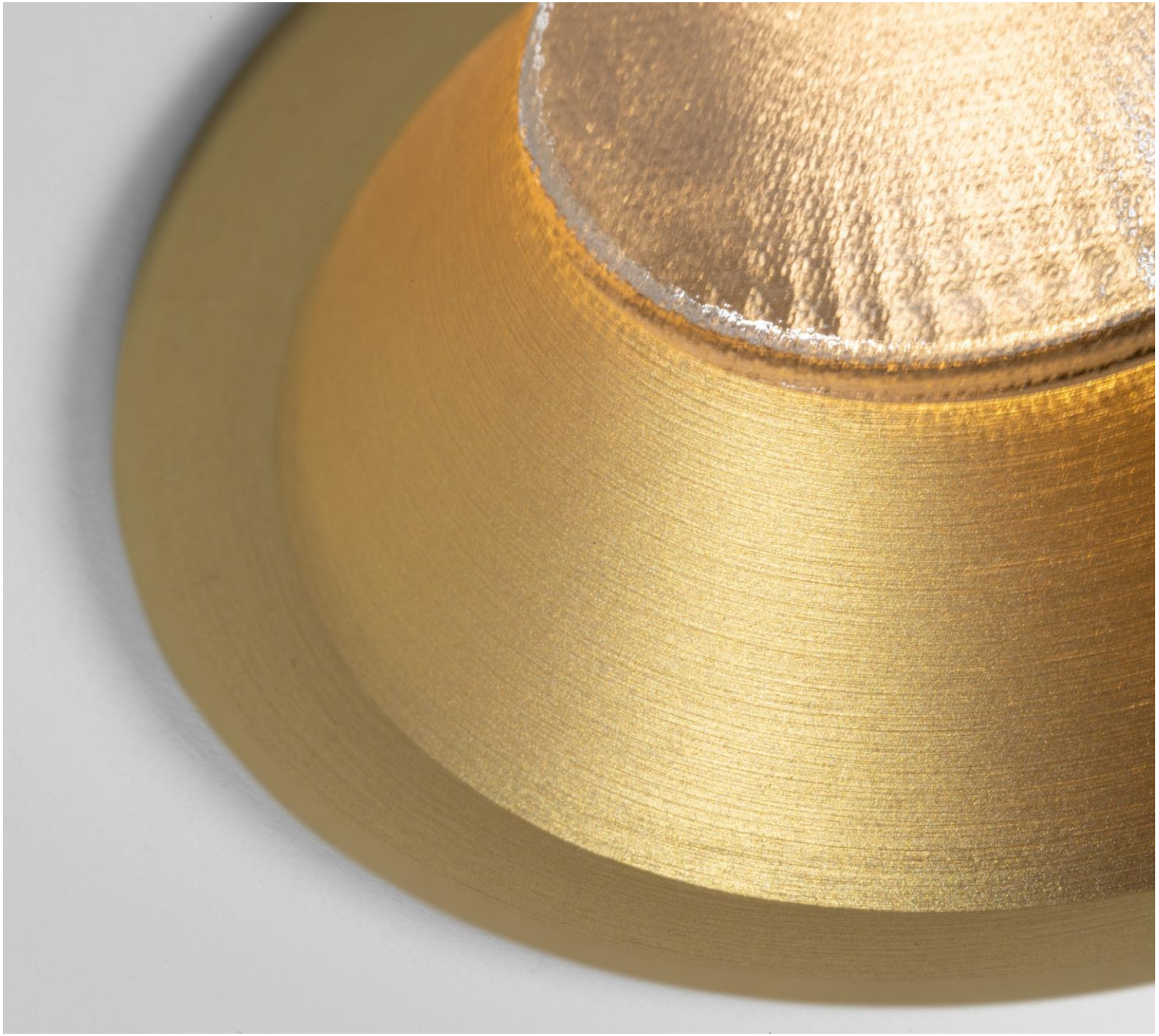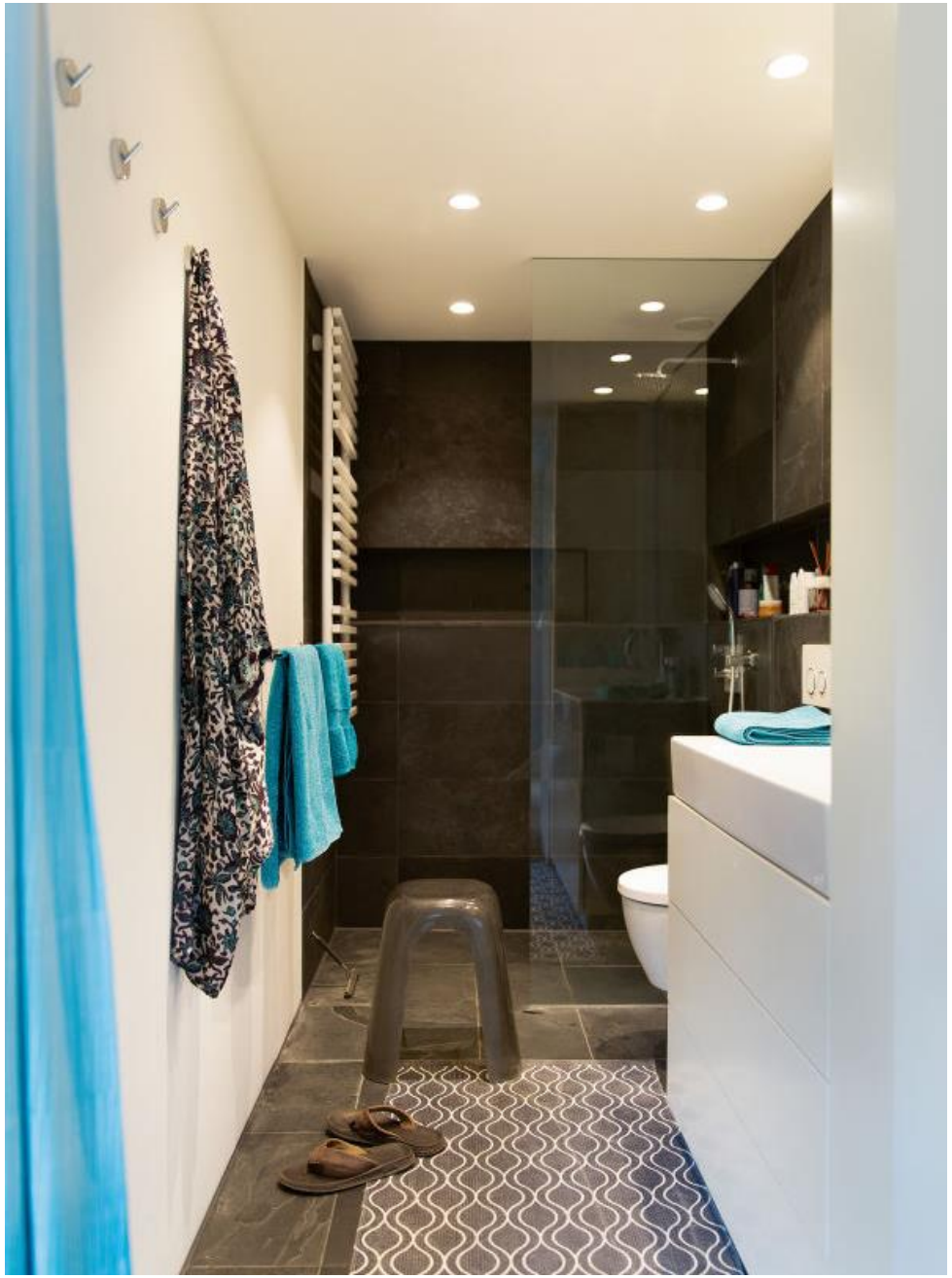
Volker Hinz